Customer Service
Phone: (714) 312-5080
Fax: (714) 312-5070
E-mail: CustomerCare@magnitudeinc.com

Magnitude VersaDrive

300W, 1-Channel, Class 1
288W, 3-Channel, Class 2
5-Way Universal Dimming
24V LED Driver

Specification Sheet

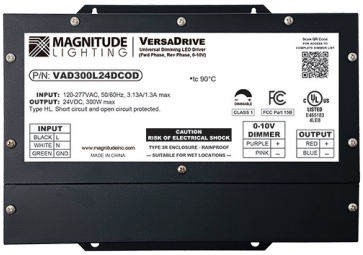

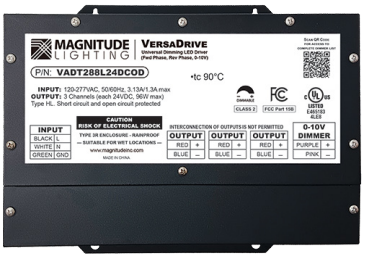

Key Features

- 5-way universal dimming
- Smooth flicker-free dimming, down to 1%
- Compatible with high density LED & COB products
- Universal input voltage – 120 to 277VAC
- Constant power overload protection
- Lever wire connectors pre-installed
- UL rated for wet locations
- 5-year warranty

Description: Constant voltage dimmable LED driver
Installation: Integrated junction box with multiple ⅞" knockouts
300W Driver Type: 1-Channel, Class 1
288W Driver Type: 3-Channel, Class 2
Dimming: 5-way dimming: forward phase (MLV), reverse phase (ELV), 0-10V, PWM, and potentiometer
Output Dimming Method: Uses Pulse Width Modulation (PWM)
Flicker: Meets California Title 24 / JA8
Input Voltage: Universal 120VAC to 277VAC, 50/60Hz
Output Voltage: 24VDC
Wattage: 300W and 288W (3 x 96W)
Enclosure Rating: NEMA 3R
Listing: UL listed, wet location
Certifications: UL8750, FCC Consumer Limits (Class B)
Warranty: 5-Year

Width	9.9" (252mm)
Overall Height	7.6" (193mm)
Height	6.4" (163mm)
Depth	1.9" (48.3mm)

MEETS TITLE 24/JA8 REQUIREMENTS
c UL us LISTED
DIMMABLE
PWM DIM
SELV
24VDC
RoHS Compliant
120 - 277V

ORDERING GUIDE

1-Channel	Max Power	Listing	Output	Enclosure Type
VAD	**300** – 300W	**L** – UL Listed	**24DC** – 24VDC	**OD** – NEMA 3R
3-Channel	**Max Power**	**Listing**	**Output**	**Enclosure Type**
VADT	**288** – 288W	**L** – UL Listed	**24DC** – 24VDC (x3)	**OD** – NEMA 3R

Magnitude VersaDrive

300W, 1-Channel, Class 1
288W, 3-Channel, Class 2
5-Way Universal Dimming
24V LED Driver

Specification Sheet

Customer Service
Phone: (714) 312-5080
Fax: (714) 312-5070
E-mail: CustomerCare@magnitudeinc.com

SPECIFICATIONS

Input	300W	288W
Input Voltage Range	120 to 277VAC ± 10%	120 to 277VAC ± 10%
Input Frequency	50 / 60Hz	50 / 60Hz
Input Current	3.0A @ 120V, 1.8A @ 277V	3.0A @ 120V, 1.8A @ 277V
Inrush Current	90A @ 277V	90A @ 277V
Efficiency	91% @120V, 93% @ 277V	91% @120V, 93% @ 277V
Power Factor	277VAC, > 0.90 120VAC, > 0.90	277VAC, > 0.90 120VAC, > 0.90
THD	< 20%	< 20%
Output		
Output Voltage	24VDC	24VDC per channel
Maximum Load	300W	96W per channel (unloaded channels permitted)
Minimum Load	40W	20W per channel
Output Current @ Max. Load	12.5A	4.1A per channel
Output Dimming Method	PWM	PWM
Flicker	California Title 24 / JA8	California Title 24 / JA8
Output Ripple (Peak-to-Peak)	< 5%	< 5%
Line Regulation	± 5%	± 5%
Load Regulation	± 5%	± 5%
Current Output Tolerance @ Max. Load	N/A	± 5% @ 100% Dim
Channel-to-Channel	N/A	± 5% @ 50% Dim
Turn On Delay Time	< 0.5 sec	< 0.5 sec
Environmental		
Ambient Operating Temperature	-40°C to 50°C (-40°F to 125°F)	-40°C to 50°C (-40°F to 125°F)
Maximum Case Temp. (Tcase)	90°C (194°F)	90°C (194°F)
Storage Temperature	-40°C to +85°C (-40°F to 185°F)	-40°C to +85°C (-40°F to 185°F)
Enclosure	NEMA 3R Rated	NEMA 3R Rated
Cover Screws	Stainless Steel	Stainless Steel
Expected Lifetime	≥ 80,000 hrs @Tc ≤ 60°C	≥ 80,000 hrs @Tc ≤ 60°C
Dimming		
Dimming Style	Phase-Cut or 0-10V	Phase-Cut or 0-10V
Minimum Dimming Level	1%	1%
Minimum Load for Dimming	40W	20W per Channel
Dimming Curve	Linear	Linear
Compliance	0-10V Dimming Compliant with ANSI C137.1	0-10V Dimming Compliant with ANSI C137.1
Protection		
Over Current Protection	Yes	Yes
Over Voltage Protection	Yes	Yes
Over Temperature Protection	Yes / Auto-Recovery	Yes / Auto-Recovery
Overload Protection	Yes / Current Limit	Yes / Current Limit
Short Circuit Protection	Yes / Auto-Recovery	Yes / Auto-Recovery
Connectors		
Lever Style Connectors	Pre-installed, all wire leads	Pre-installed, all wire leads
Listing	UL Listed	UL Listed

Customer Service
Phone: (714) 312-5080
Fax: (714) 312-5070
E-mail: CustomerCare@magnitudeinc.com

MECHANICAL DIAGRAMS

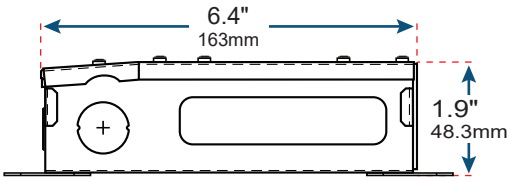

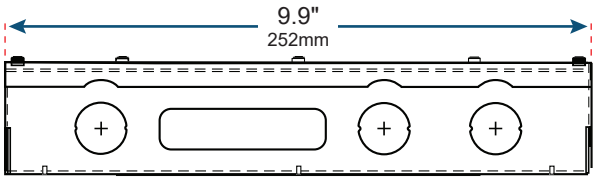

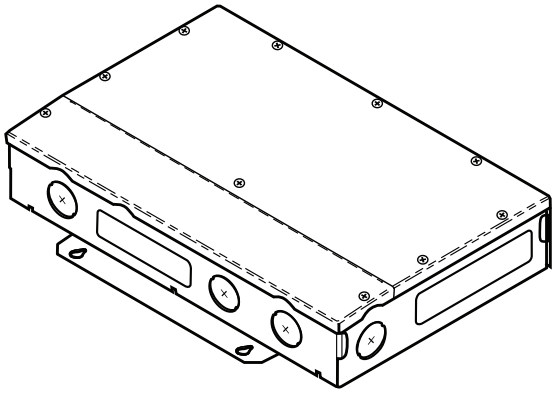

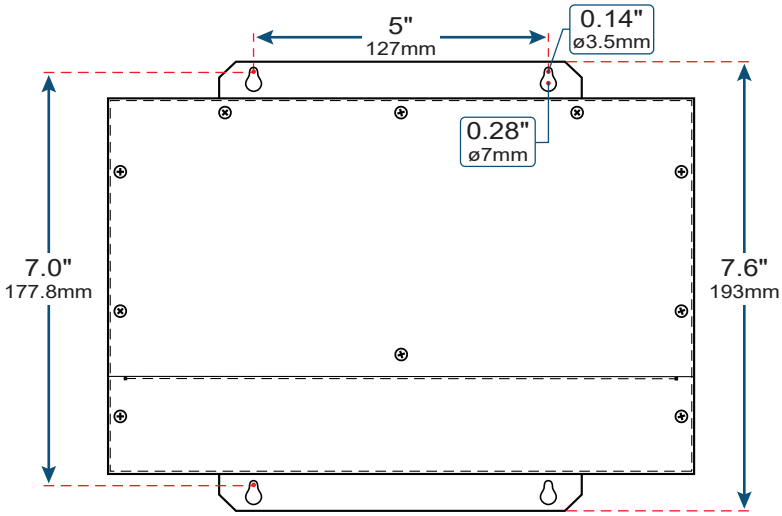

Customer Service
Phone: (714) 312-5080
Fax: (714) 312-5070
E-mail: CustomerCare@magnitudeinc.com

300W WIRING DIAGRAMS

300W Phase-Cut Dimmable Configuration

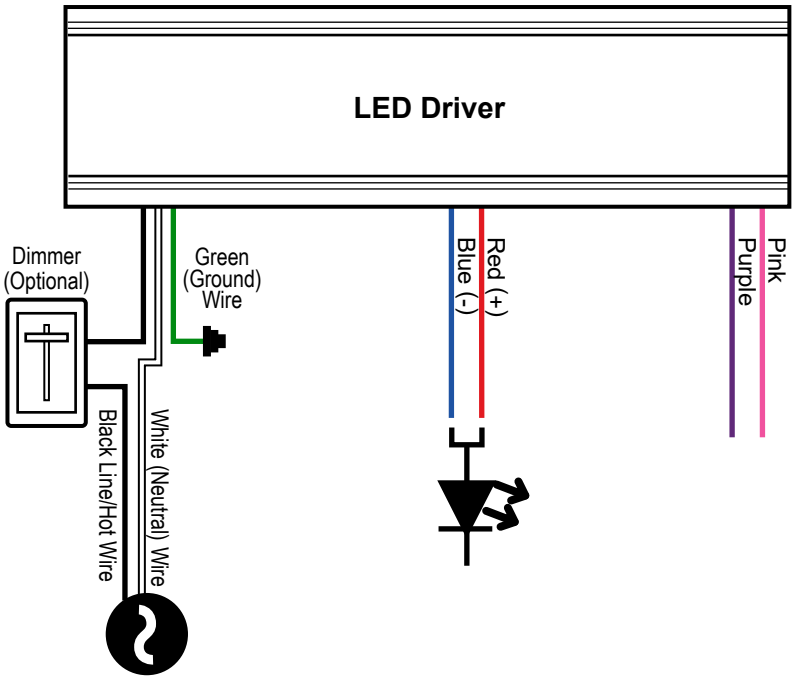

Note: Pink & purple wires are not used for this configuration.

300W 0 to 10V Dimmable Configuration

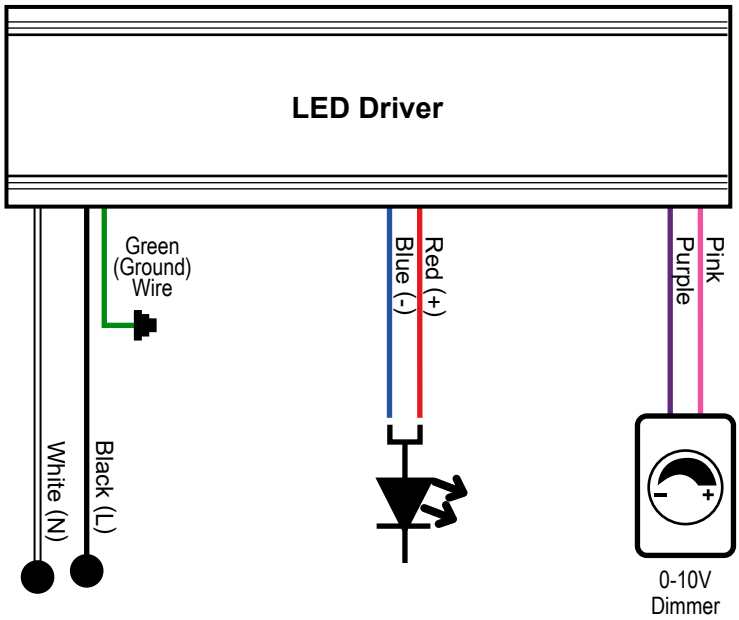

Customer Service
Phone: (714) 312-5080
Fax: (714) 312-5070
E-mail: CustomerCare@magnitudeinc.com

300W WIRING DIAGRAMS, *Continued*

↓ 300W Potentiometer Dimmable Configuration ↓

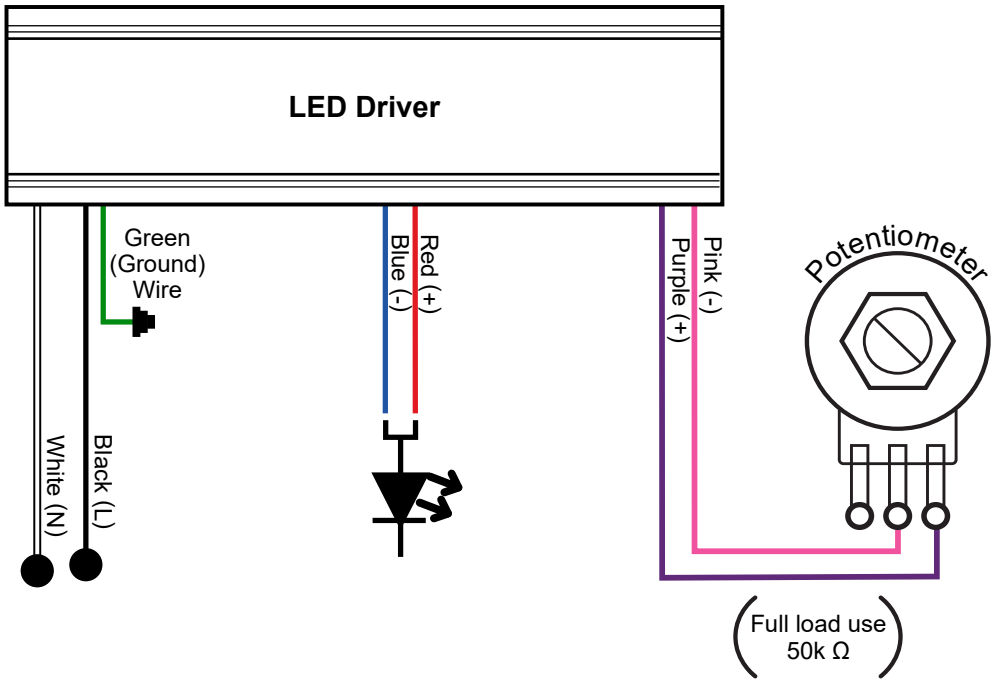

Customer Service
Phone: (714) 312-5080
Fax: (714) 312-5070
E-mail: CustomerCare@magnitudeinc.com

288W WIRING DIAGRAMS

288W Phase-Cut Dimmable Configuration

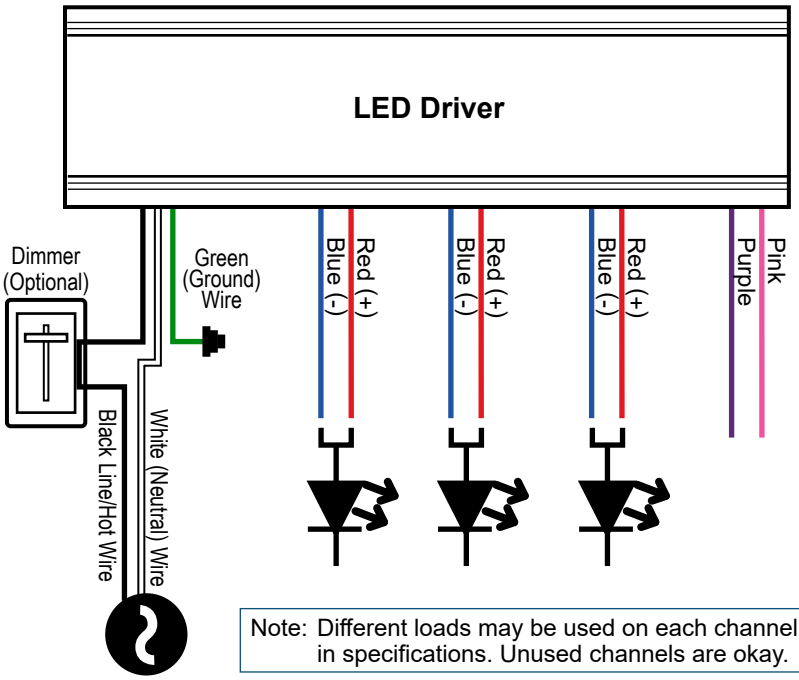

Note: Pink & purple wires are not used for this configuration.

Note: Different loads may be used on each channel, subject to minimum/maximum in specifications. Unused channels are okay.

288W 0 to 10V Dimmable Configuration

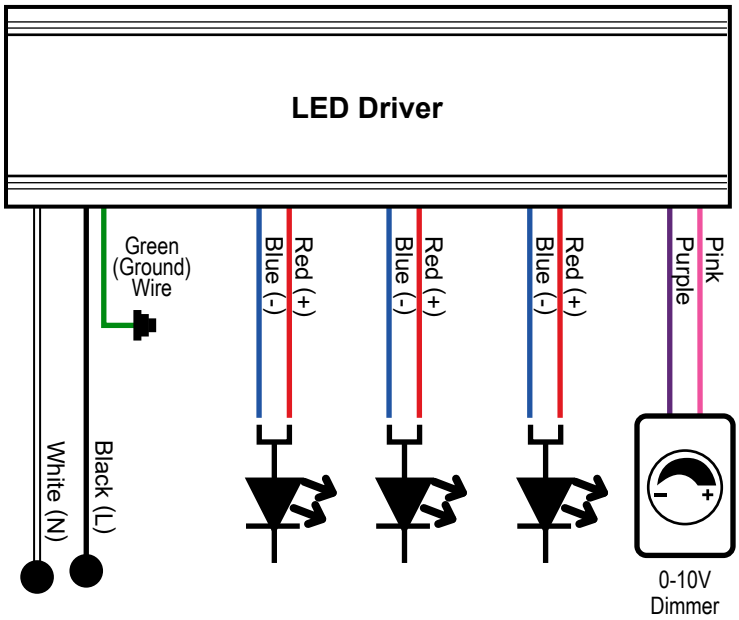

Note: Different loads may be used on each channel, subject to minimum/maximum in specifications. Unused channels are okay.

Customer Service
Phone: (714) 312-5080
Fax: (714) 312-5070
E-mail: CustomerCare@magnitudeinc.com

288W WIRING DIAGRAMS, *Continued*
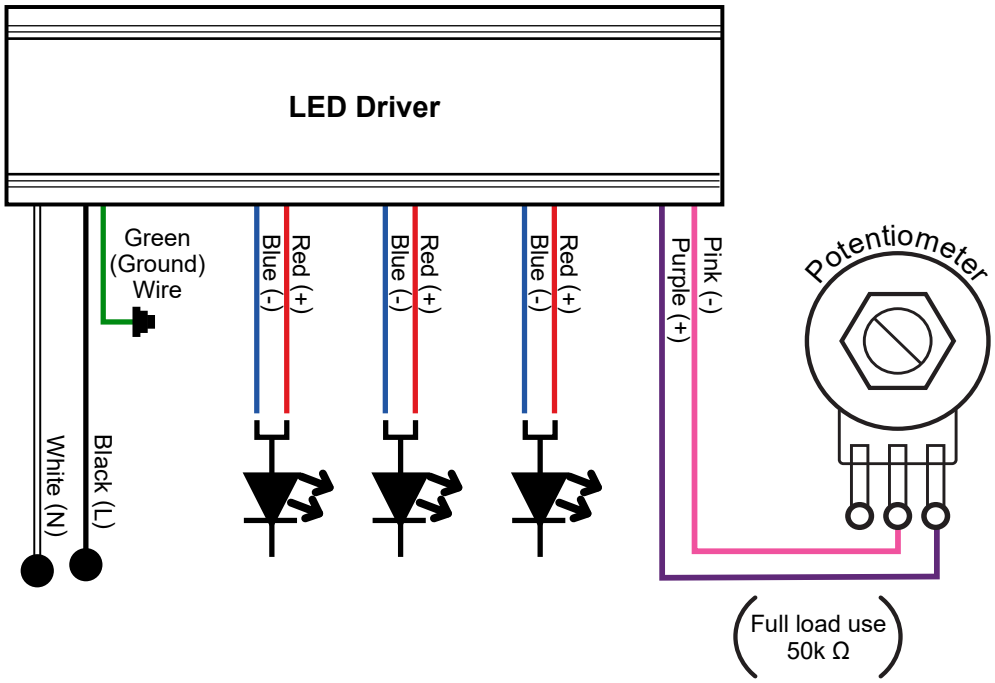
↓ 288W Potentiometer Dimmable Configuration ↓