EMT900-E

Magnetic Non Dimmable

Outdoor Stainless Steel Enclosure

Multi Tap: **12-15VAC**

Total Wattage: **900W max**

Input Voltage: **120V 60Hz**

EMCOD Lighting Group

www.emcod.com

Conforms to UL STD. 1838
Certified to CSA
STD. C22.2 № 250.0, 250.7

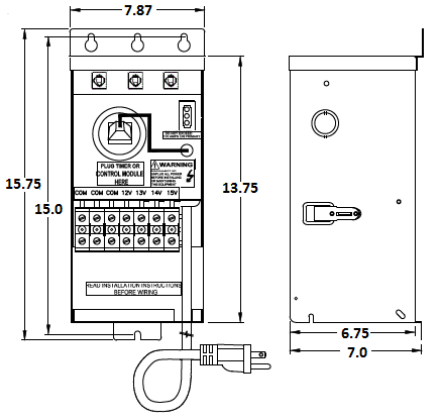

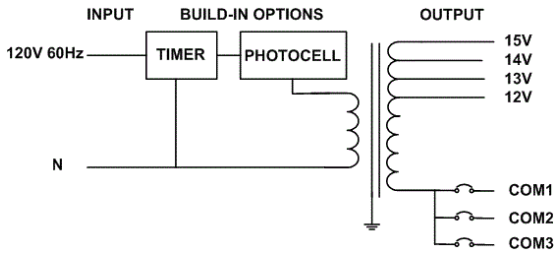

Transformer

Non dimmable if use timer or/and photocell
Temperature class B(130°C)
Input leads: Line cord
Output leads: Terminal Block
Magnetic manually reset secondary breaker 25A per circuit
Timer and photocell build in options

Housing

The actual transformer 900W is encapsulated in the enclosure
The enclosure is Stainless Steel, NEMA 3R rated
Wiring compartment has 10 knockouts sizes for 3/8 inch screw cable connectors
Enclosure Temperature does not exceed 75°C at 45°C ambient and fully loaded
Dimensions (inch): H = 15.75, W = 7.87, D = 7
Weight (LBs): 3.8

Electrical Parameters

Input Voltage:	**120V 60Hz**	
Max. input current at full load:	**7.5A**	
Output voltage without load:	**12/ 13/ 14/ 15VAC**	
Output voltage fully loaded:	**11.5/ 12.5/ 13.5/ 14.5VAC**	
Max. Total Wattage:	**900W**	Max. per circuit: **300W**
Max. Output Current:	**25/ 23/ 21/ 20A** per circuit.	
Efficiency:	**94%**	
Load regulation:	**4%**	

Mailing Address: 6925 Eton Ave. Canoga Park, CA 91303 Tech support: Arik Nirenberg phone: 818-904-3309 cellphone: 818-269-4091
Fax: 818 904 3327 info@emcod.com techsupport@emcod.com