Customer Service
Phone: (714) 312-5080
Fax: (714) 312-5070
E-mail: CustomerCare@magnitudeinc.com

MAGNITUDE VERSADRIVE

96W, 1-Channel, Class 2
300W, 1-Channel, Class 1
5-Way Universal Dimming

Installation Guide

LISTED DIMMABLE 24V DC

BEFORE YOU BEGIN

General
This driver is to be installed in accordance with Article 450 of the National Electric Code (NEC). The driver must be installed in a well-ventilated area, free from explosive gases and vapors. Proper operation requires for free flow of air. Since this driver is hardwired, it should only be installed by a qualified electrician.

Precautions Before Installation
Check the label and ensure the driver has the proper input voltage and wattage for the job. Check the wire markings to ensure they match the wiring diagram (below).

Mounting
Select a suitable location capable of supporting the weight of the driver. Mount the unit using the four (4) keyholes in the driver case. Keep a minimum space of 5" between each driver.

Input Connections/Grounding
Remove the wiring cover and install the clamp connectors. With power turned off, route the input wires through the opening of a removed knockout on the front or side of the driver using a wire strain relief. Make connections according to the following wiring diagram. For all wire connections, use the supplied Wago wire connectors. The driver MUST be grounded in accordance with the NEC. Driver input wires colors are Line (black), Neutral (white) and Ground (green).

Quick Specs

Input Voltage	120-277VAC
Output Voltage	24VDC
Max. Ambient Temp.	-40ºC to 50ºC
Enclosure	Nema 3R (Outdoor Use)
Minimum installation space between drivers	5”

Dimming (5-Way)
Dimmable with forward phase (MLV), reverse phase (ELV), 0-10V, PWM, and potentiometer style dimmers.

Output Connections
Bring the wires of each fixture through the opening of a removed knockout on the front or side of the driver using a wire strain relief. Connect the positive (+) and negative (-) wires of the fixture to positive (red) and negative (blue) output of the driver using the included Wago connectors according to the following wiring diagram. Do not exceed the maximum wattage per channel (96 watts for VAD96L24DCOD / 300W for VAD300L24DCOD).

Minimum load for VAD96L24DCOD is 8W.
Minimum load for VAD300L24DCOD is 40W.

WIRING DIAGRAMS

▼ Phase-Cut Dimmable Configuration ▼

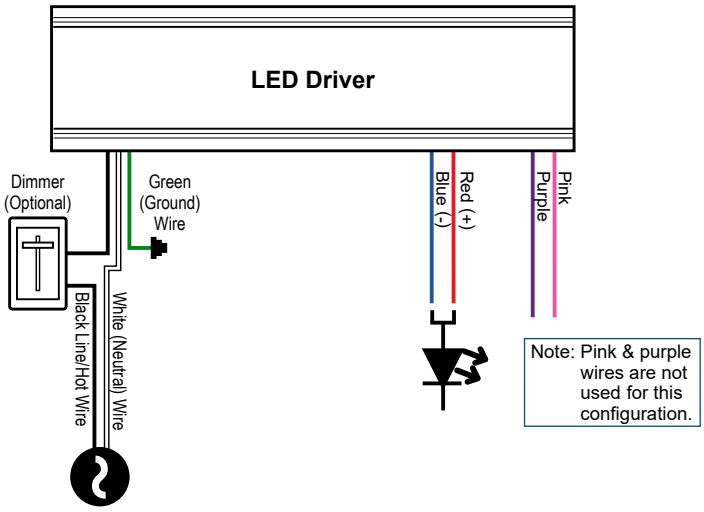
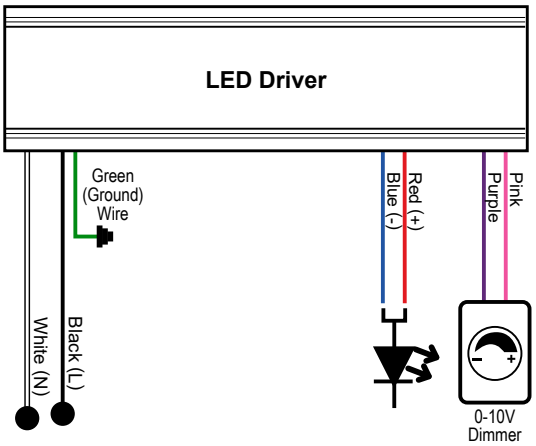
▼ 0-10V Dimmable Configuration ▼