MAGNITUDE LIGHTING

300W M-Series Driver

Indoor & Outdoor Magnetic Dimmable Transformer

Product Code: M300L24DC-AR **iLED SKU#: 3759**

Magnitude's M300L24DC-AR is the most compact LED driver on the market with a magnetic transformer core. It is equipped with two auto-reset breakers, one on the input and one on the output to protect both the load and driver. The driver is encased in a coated metal box that includes two knock-outs on the bottom for easy installation which complies with electrical code requirements.

Features

Dimmable with standard MLVTRIAC (leading edge) dimmer switch
Dual protection-primary and secondary auto-reset circuit breakers
Nema 3R Enclosure- Outdoor Use
Two bottom knock-outs
ETL Listed, Certified to CSA Standard

Specifications

50% Load is required if not being used with a dimmer.

Max Load	300W
Input Voltage	120V AC
Input Current at Max Load	2.86 A
Output Voltage at Max Load	23.5V DC
Max Output Current	12.5 A
Open Circuit Output Voltage	25.5V DC
Avg. Efficiency	85%
Power Factor	>0.93
Coil Former	Double Section Bobbin
Max Ambient Temperature	-30°C to 45°C
Min Installation Space btw Drivers	5 inches
Thermal Class	B130°c
Leads Primary	PVC 600V #18
Leads Secondary	PVC 300V #12
Dimensions (inch)	9.8" x 4.2" x 3.5"
Weight	140 oz.

Wiring Diagram

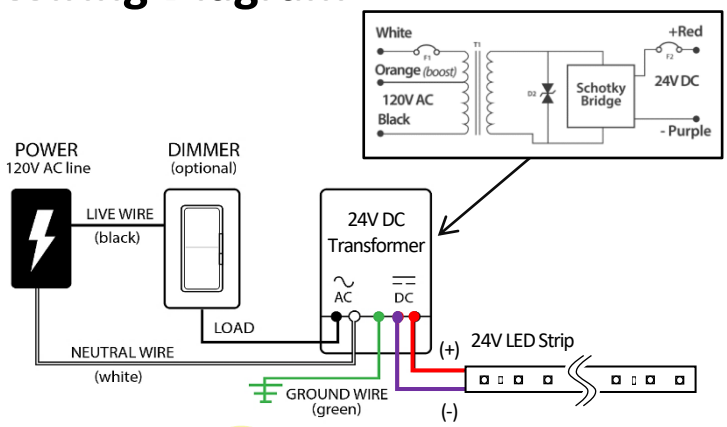

BEFORE YOU BEGIN

Note: This dimmable transformer requires a ***compatible magnetic low voltage (MLV) wall dimmer*** for proper operation. See the list of approved dimmers recommended by Magnitude Inc. and Inspired LED. Driver must be installed in a well-ventilated area free from explosive gasses and vapors. Proper operation requires a free flow of air. Driver should be installed by a qualified electrician in accordance with N.E.C..

Precautions Before Installing

Check the label to ensure the driver has the proper input voltage and wattage for the job. Check the wire markings to ensure they match the wiring diagram below.

Input Connections/Grounding

Remove the wiring compartment knockouts and install the clamp connectors provided with the driver. With power turned off, route the input wires through the clamp connector and connect one wire to black and one wire to white. For all wire connections use only UL listed wire nuts and connectors of suitable size and style. Connect the ground wire to the driver green wire*, the driver case MUST be grounded in accordance with N.E.C..*

Orange Boost-Tap

The orange Boost-Tap wire is an optional 10% voltage boost which can compensate for voltage drop between the driver and the fixture. If fixture is receiving 21.5V or less we recommend substituting the black wire for the orange boost wire.

Output Connections

Bring the wires of the light fixture through the other clamp connector and connect them to the driver wire- positive to the **red (+)** wire and negative to the **purple (-)** wire.

Mounting

Select a location capable of supporting the weight of the driver. Use the two keyholes in in the driver case to mount using suitable screws. It is recommended that the driver be mounted vertically with the wiring compartment pointing down.
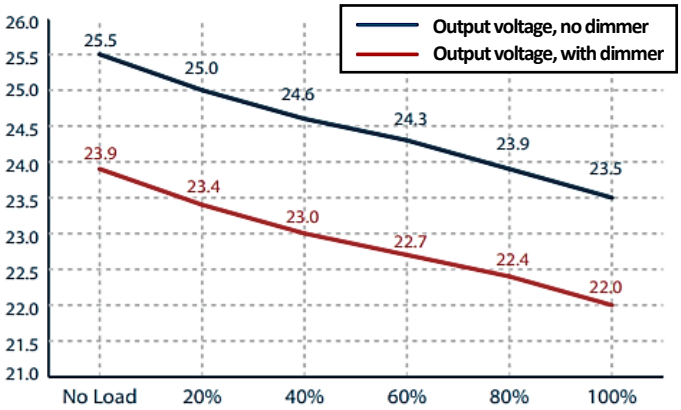
Output Voltage vs. Load