ELI-S-25

MICRO INVERTER

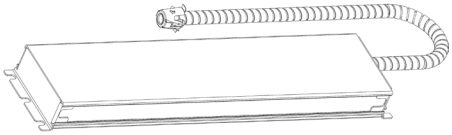

bodine

Installation and Operation Instructions

ELI SERIES EMERGENCY LIGHTING INVERTERS

LISTED

! IMPORTANT SAFEGUARDS !

WHEN USING ELECTRICAL EQUIPMENT, BASIC SAFETY PRECAUTIONS SHOULD ALWAYS BE FOLLOWED, INCLUDING THE FOLLOWING:

READ AND FOLLOW ALL SAFETY INSTRUCTIONS

1. For use with non-dimming fluorescent, incandescent or LED fixtures up to 25VA. For use with fluorescent and LED fixtures that utilize 0-10V dimming that are above 25VA, but this inverter will be limited to 25VA (including driver/ballast). Maximum connected load rating is 200W.
2. Make sure all connections are in accordance with the National Electrical Code and any local regulations.
3. To reduce the risk of electric shock, disconnect both normal and auxiliary power supplies and inverter connector of the backup micro inverter before servicing.
4. This backup micro inverter is for field installation.
5. An AC power source (120 or 277 VAC, 60 Hz) ahead of any wall switch is required to provide battery charging current.
6. Do not install near gas or electric heaters.
7. This product is for use in indoor or damp locations where the ambient temperature is 0°C to 50°C. Not suitable for outdoor, wet, or hazardous locations.
8. This is a sealed unit. Integral battery is not replaceable. Replace entire unit when necessary.
9. The use of accessory equipment not recommended by the manufacturer may cause an unsafe condition.
10. Do not use this product for other than intended use.
11. Servicing should be performed by qualified service personnel.
12. Equipment should be mounted in locations and at heights where it will not be subjected to tampering by unauthorized personnel.
13. This device complies with part 15 of the FCC Rules. Operation is subject to the following two conditions: (1) this device may not cause harmful interference, and (2) this device must accept any interference that may cause undesired operation.
14. This product must be grounded.

SAVE THESE INSTRUCTIONS

! IMPORTANT ! - PLEASE TAKE NOTE BEFORE THE INSTALLATION:

Lithium Ion

THIS PRODUCT CONTAINS A RECHARGEABLE LITHIUM-ION BATTERY.
THE BATTERY MUST BE RECYCLED OR DISPOSED OF PROPERLY.

10/09/2024
Bodine © 2024 Signify Holding. All rights reserved.
Collierville, TN USA • Tech Support 888-263-4638 • Fax 901-853-5009 • www.bodine.com
442296095481

INSTALLATION

NOTE: Make sure that the necessary branch circuit wiring is available. An unswitched source of power is required. The unswitched and switched power source must be fed from the same branch circuit.

This product is suitable for field installation with suitable luminaires including LED, fluorescent, and incandescent luminaires with 0-10V dimming capability. The 0-10V dimming capability may not be necessary for luminaires that operate under 25VA. This product has been designed to reliably interface with a wide selection of luminaires which are electrically compatible with 120VAC at 60Hz and a 0-10V dimming interface. However, compatibility cannot be guaranteed with all current and future luminaire systems.

Compatibility testing of the end-use system is recommended. Please contact the factory with any questions. After installation, it will be necessary to measure the egress lighting illumination levels to ensure it complies with national, state, and local code requirements.

INSTALLING THE BACKUP MICRO INVERTER

> The backup micro inverter will be located between the AC power sources and the AC ballast/driver as shown in wiring diagram section of instructions.

> NOTE: The backup micro inverter may be installed in close proximity to the fixture or remote from the fixture. The maximum remote distance using 16 AWG wire is 250 ft. Contact the factory for more information.

> The AC ballast/driver receives power from the backup micro inverter. Identify the output wires of the backup micro inverter by the presence of the red/black and red/white leads.

STEP 1 - DISCONNECT AC POWER FROM FIXTURE

> Disconnect all power sources to the lighting fixture and ensure they are locked out during installation or maintenance.

> The AC ballast/driver must be sourced from the backup micro inverter.

> Select a suitable location for the backup micro inverter and install such that its output leads can connect to the input leads of the AC ballast/driver.

> See Illustration 1, for typical installation and select appropriate mounting method.

STEP 2 - CONNECT THE BACKUP MICRO INVERTER TO THE PROPER LINE VOLTAGE

> Note that the unswitched hot connects to the red input lead of the backup micro inverter.

STEP 3 - WIRE THE BACKUP MICRO INVERTER

> Use the wiring diagram found on page 6 as reference.

> Connect the AC power source leads (Switched and Unswitched) to the input of the micro inverter.

> Connect the output leads of backup micro inverter to the AC ballast/driver.

> Wire the AC ballast/driver with the lamp in accordance with manufactures installation instructions. No ballast/driver is necessary for single dimmable lamp (under 10VA) application.

> Make sure all connections are in accordance with the National Electrical Code.

> Connect the Test Switch/Charging Indicator Light by matching yellow/red to red lead and yellow/black to black leads. Mount in a readily visible location.

> In a readily visible location, attach the label "CAUTION-This Unit Has More Than One Power Connection Point. To Reduce The Risk Of Electric Shock, Disconnect Both The Branch Circuit-Breakers Or Fuses And DC Power Supply Before Servicing."

INSTALLATION

STEP 4 – APPLY AC POWER

> After installation is complete, apply AC power.
> At this point, power should be connected to both the AC ballast/drive and the backup micro inverter, and the green Charging Indicator Light should illuminate/flash indicating the battery is charging.
> A short-term discharge test may be conducted after the backup micro inverter has been charging for one hour. Charge for 24 hours before conducting a long-term discharge test. Refer to OPERATION.
> The mounting kit accessory allows placing the ELI-S-25 product inline with a chain, cable, or similar mounting means above a lighting product such as a highbay lighting fixture.

STEP 5 – MOUNT INVERTER TO MOUNTING BRACKET ACCESSORY

> Loosen the two screws which hold the clamping plate having the serrated teeth on the mounting bracket. Removal of this plate is not necessary.
> Place edge of inverter housing into the two support flanges on the mounting bracket.
> Rotate housing up into place and tighten the two screws loosened earlier. The teeth of the clamping plate will dig into the inverter housing, securing the inverter to the mounting bracket.

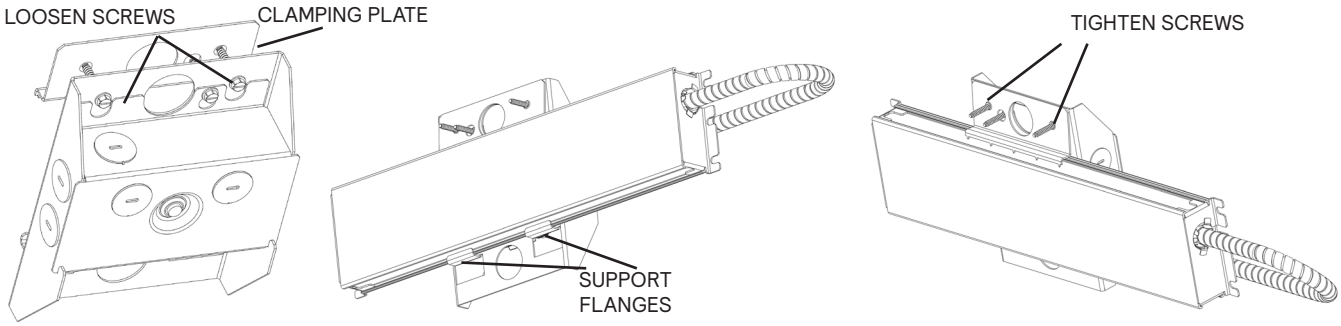

STEP 6 – HANG INVERTER & MOUNTING KIT ACCESSORY. MAKE WIRING CONNECTIONS.

> Loosen the screw holding the cover onto the junction box of the mounting bracket. Removing the screw is not necessary.
> Slide cover plate upwards and remove cover from junction box.
> Locate the test switch supplied with the inverter. Remove the locking ring from the switch, place the switch through the round, recessed hole in the cover plate and reinstall the switch locking ring.
> Use supplied quick links two provide, if needed, to place the mounting bracket/inverter assembly inline, and just above, the lighting fixture.
> Remove desired knockouts from the junction box or cover of the mounting kit accessory. Snap loose end of wiring conduit from inverter, AC power conduit and any conduits from the lighting fixture to the junction box.
> Refer to PAGE 2, STEP 3 of this instruction sheet to make all wiring connections and apply CAUTION label.
> Replace junction box cover and tighten cover securing screw. Ensure no wires are pinched.
> If inverter hangs off center, it may be balanced by loosening the two clamping plate screws and shifting the inverter left or right as required. Retighten clamping plate screws.

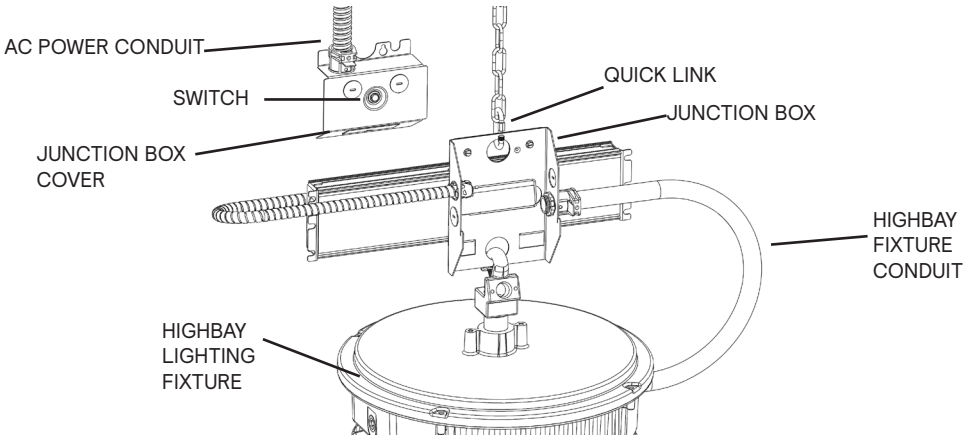

OPERATION

During normal operation, AC power is supplied to the AC ballast/driver through the backup micro inverter and the inverter charges its internal battery. The backup micro inverter may be powered via 120 or 277VAC but will only output 120VAC 60Hz.

When AC power fails, the backup micro inverter automatically switches to emergency mode, keeping the load illuminated for a minimum of 90 minutes. When AC power is restored, the backup micro inverter returns to charging mode. The backup micro inverter consists of a low-battery voltage disconnect which is reset when AC power is restored. The unit can also detect an abnormal load condition (open or shorted load) during emergency mode operation and will protect the backup micro inverter from damage.

ABConnect:
Applying AC power to the unit activates the charger circuit, and supplies power to the control/monitor circuit and charging indicator light.

To deactivate the unit for storage or shipping, press and hold the test button while the unit is in emergency mode until the light load is turned off.

Self-Test:
This unit contains self-testing functionality and will conduct one 30-second discharge test once a month and a full 90-minute discharge test once a year. During routine testing, the self-testing emergency inverter simulates an AC power failure causing the unit to automatically switch to emergency mode. The unit will monitor the operation of the load, battery voltage, and emergency duration. If the emergency system functions properly, then the unit will return to normal mode. Should the unit detect any problems, the indicator light will flash per failure condition (see Troubleshooting Guide) until the condition has been corrected and the unit passes the next test.

Commissioning: After the emergency inverter has been charged for one hour an automatic commissioning test will be performed. The emergency inverter will switch to the emergency mode for 30 seconds and store in its memory the current level of the connected load. If during future self-test, this level deviates by more than 25%, an error will be triggered, and a derangement signal will be shown.

Caution: Once commissioned, connecting this equipment to a different fixture will result in current levels outside the commissioned range of the device, triggering a derangement signal indicating the equipment requires re-calibration to ensure proper operation.

To perform a manual self-diagnostic test, push and hold the Test Switch for minimum of 5 seconds. Once test switch is released the emergency driver will perform a 30 second diagnostic test. During this test, unit will monitor the operation of the LED load, and battery voltage. If the emergency system functions properly, the unit will return to normal mode. To end the diagnostic test prematurely, hold the Test Switch for a minimum of 3 seconds or until the light load turns off. Should the unit detect any problems during testing, the indicator light will flash per failure condition (see Troubleshooting Guide) until the condition has been corrected and the unit passes the next test.

To reset a failure indication, perform a self-diagnostic test. If the condition has not been corrected, the unit will once again detect the failure and signal the failure indicator.

MAINTENANCE

This self-testing emergency driver automatically performs required routine testing. Results are reported to maintenance personnel via the indicator light.

Note: Maintenance personnel should periodically check the indicator light. If the indicator light is flashing red, follow steps in the Troubleshooting Guide.

TROUBLESHOOTING GUIDE

If the unit has encountered a problem after installation, then the Illuminated Test Switch will flash the error code with the red indicator light. Count the number of times the indicator is OFF to read the number of flashes. Then use the troubleshooting steps to solve the issue.

TROUBLESHOOTING

Trouble State or Indicator Light Status	Error	Corrective Action
Green/ No Flashes	None	• The unit is operating correctly, and the internal battery is fully charged.
Green / Slow Flashes	None	• The Unit is charging. The main light is operating normally. • The Unit is running a self-diagnostic test. The Fixture Load is operating in Emergency mode.
Red/No Flashes	None	• In Emergency mode
Off	None	• Emergency run-time is ended and Unit is de-activated.
Red/2x Flashes	Battery Fault	• Indicates that a self-test/self-diagnostic test did not meet full duration. • Charge the Unit for the rated recharge time and perform a manual self-diagnostic test. • If error is still present, then the battery is past its useful life and should be replaced.
Red/3x Flashes	Charging	• Check input AC mains wiring of Unswitched Hot, Neutral and Ground. Check battery voltage and ensure battery is connect fully. • Check input AC mains wiring of Unswitched Hot, Neutral and Ground.
Red/4x Flashes	Load Level Change Greater Than 25%	• During a self-test/self-diagnostic test, the Unit detected the Fixture load has changed more than 25% from the initial commissioned value. • Replace the Fixture Load and perform a manual self-diagnostic. • If error is still present, then recalibrate the commission value by disconnecting AC mains to deactivate the Unit. Apply AC mains to re-activate the Unit and it will recommission itself after one hour. • Check for Open or Short circuit on the output connectors.
Red/5x Flashes	Temperature	• Product temperature is beyond its rated temperature range. • Ensure Unit is within the rated temperature range stated on the product label. • Confirm by measuring at the Tc point on the product label.

WIRING DIAGRAM

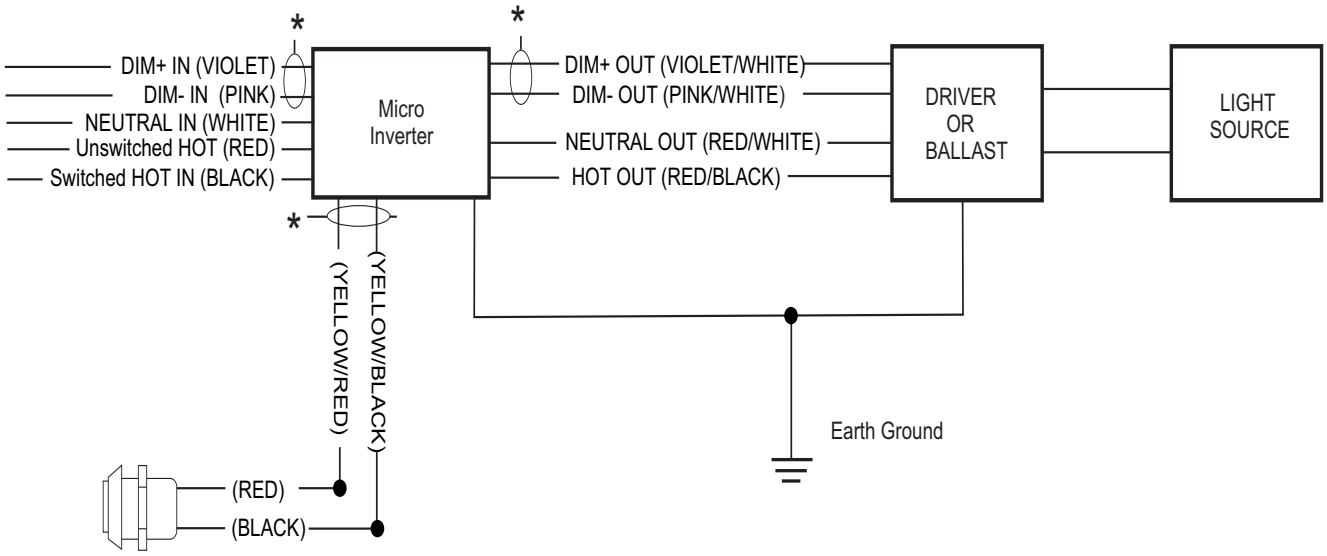

•Apply AC power to enter charging mode.
•Remove AC power to enter emergency mode.
For incandescent or non-dimming loads no greater than 25VA (ELI-S-25), cap off all unused dimming (DIM) leads separately.

*** These connections have been evaluated to comply with requirements for UL1310 Class 2 Power Units.**

BACKUP MICRO INVERTER AND AC BALLAST/DRIVER MUST BE FED FROM THE SAME BRANCH CIRCUIT

TYPICAL SCHEMATIC ONLY. CONSULT THE FACTORY FOR OTHER WIRING DIAGRAMS.