EMCOD LIGHTING GROUP

www.emcod.com

Installation Instructions

Driver + Dimmer 2 in 1 & CCT Series

EDD-CCT Series for 2CH Dimming

Constant Voltage 120VAC 60Hz

c UL us LISTED E498696 FC Class 2

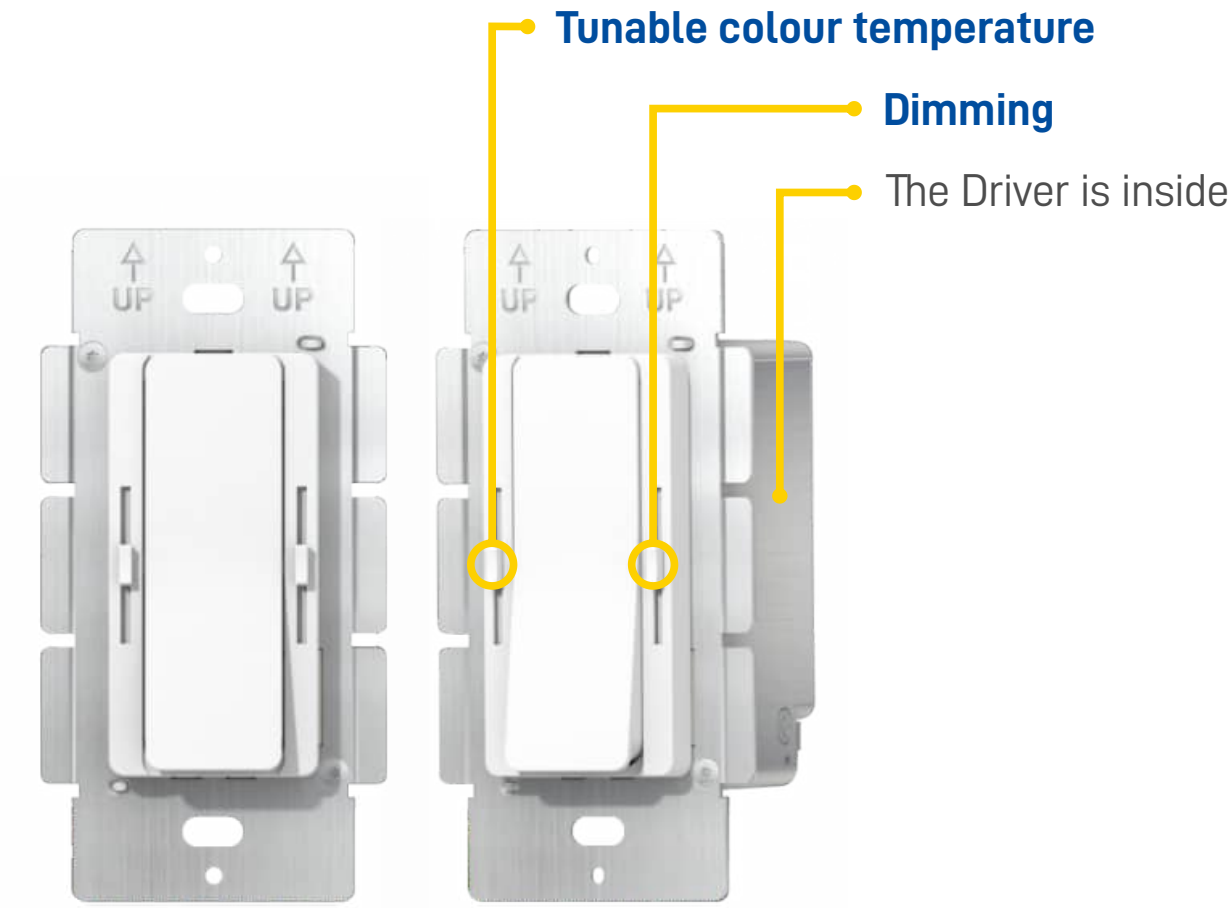

EDD-CCT Series

New design for CCT

646 Flinn Ave. Unit B, Moorpark, CA 93021 Tech support: Arik Nirenberg phone: 818-904-3309

Fax : 818 904 3327 | info@emcod.com | techsupport@emcod.com

Wiring Diagram

• Wiring diagram of **EDD-CCT** model for tunable CCT

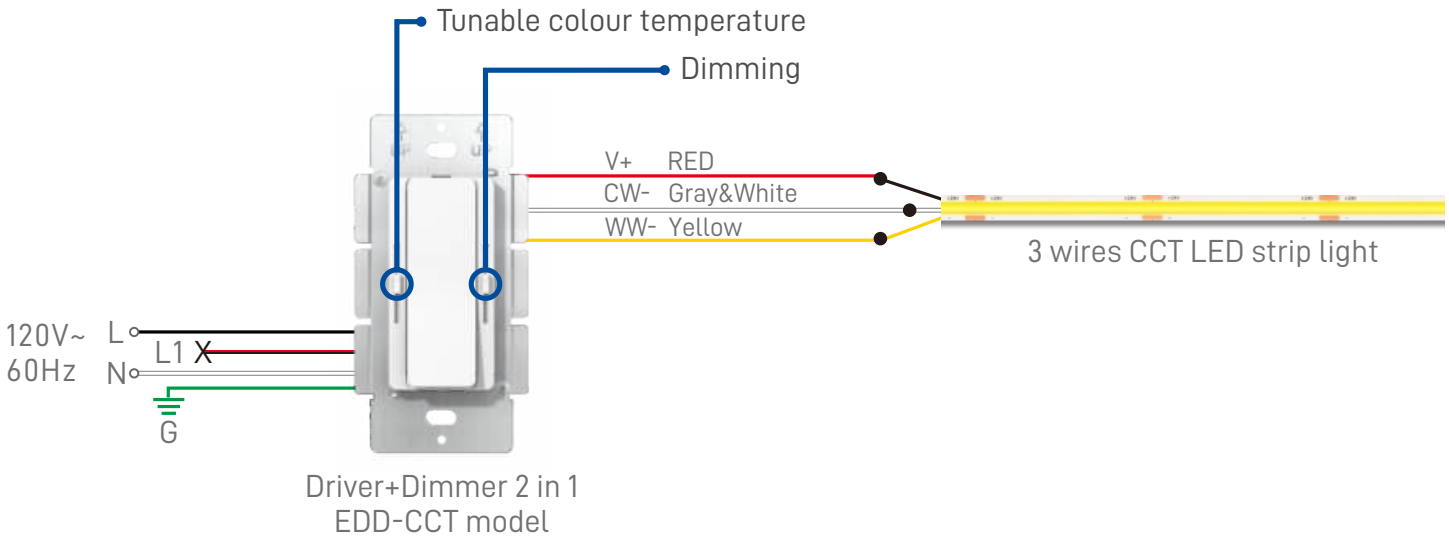

• Wiring diagram of **EDD-CCT** model for **3-way**

NOTE:Only one **EDD-CCT product** can be used in a 3-way circuit.

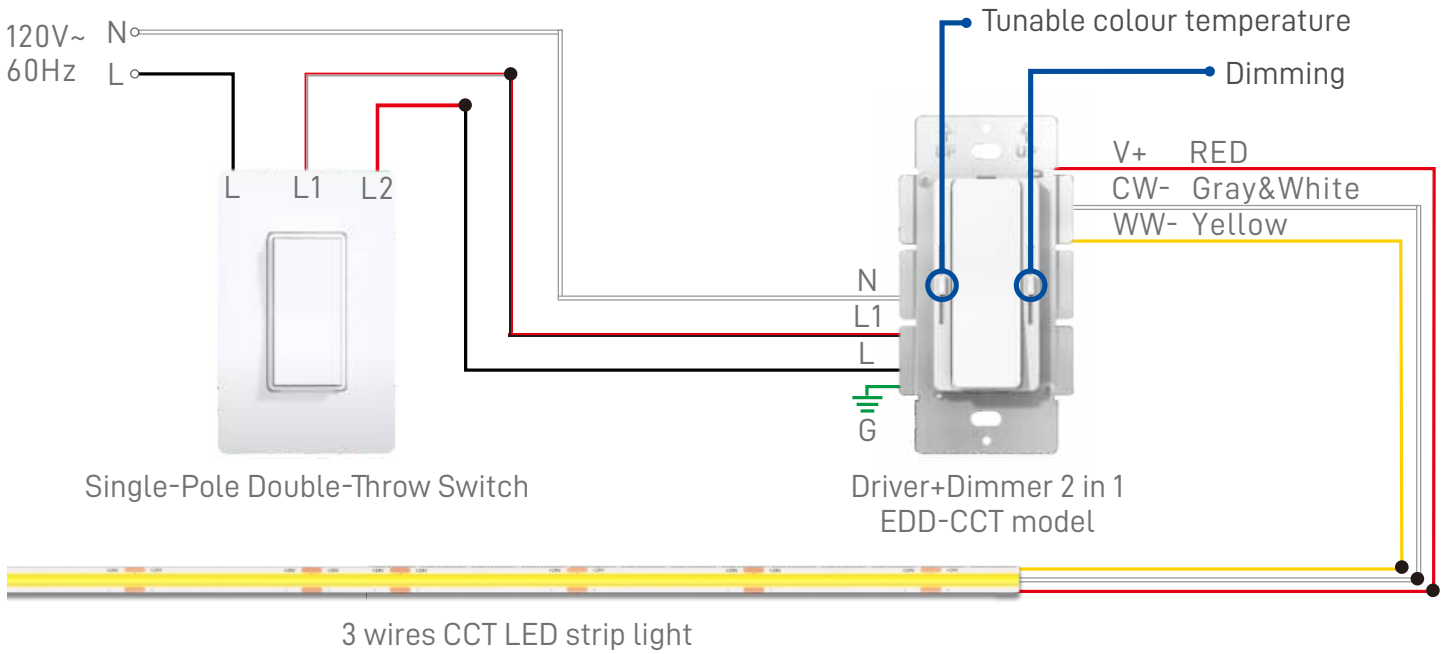

SAFETY & WARNINGS

- Install in accordance with national and local electrical code regulations.
- This product is intended to be installed and serviced by a qualified, licensed electrician.
- Only use copper wiring. Use wires rated for at least 194°F (90°C) and certified for use with external connection of electrical equipment.
- Ensure applicable wire is installed between driver, fixture, and any controls in-between. When choosing wire, factor in voltage drop, amperage rating, and type (in-wall rated, wet location rated, etc.). Inadequate wire installation could overheat wires, and cause fire.
- Do not install in environment where excessive heat may exist (ex. close proximity to fireplace, etc.) See Ambient Temperature ratings.
- Do not modify product beyond instructions or warranty will be void.
- Actual color may vary from what is pictured on this sheet and other print materials due to the limitations of photographic processes.
- We reserve the right to modify and improve the design of our fixtures without prior notice. We cannot guarantee to match existing installed fixtures for subsequent orders or replacements in regards to product appearance, CCT, or lumen output.
- This device complies with part 15 of the FCC Rules. Operation is subject to the following two conditions: (1)This device may not cause harmful interference, and (2) this device must accept any interference received, including interference that may cause undesired operation.

* The face plate is not replaceable.

Provided accessories

LED Driver+Dimmer 2 in 1

Barrier

Mounting Screw (X2)

Wire Nut (X8)

Tools For Install

Flat-head screwdriver

Phillips-head screwdriver

Pliers

Wire Strippers

1. Turn Power Off at Circuit Breaker

- SHOCK HAZARD!
- May result in serious injury or death. Turn power OFF at circuit breaker prior to installation.

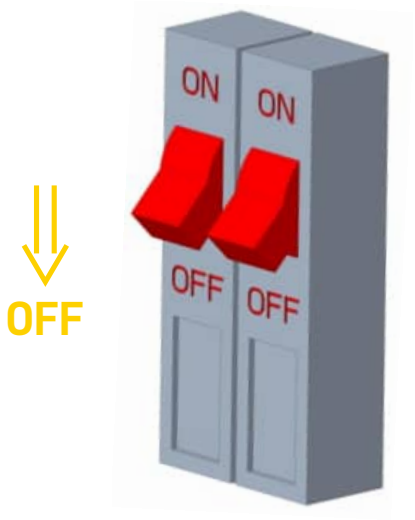

2. Determine Location to Install Components

LED Driver+Dimmer 2 in 1

Fixture (Not Included)

3. Remove Existing Switch (if necessary)

- Remove trim plate and switch mounting screws.
- Pull switch from wall.
- Identify wires connected to switch and mark wires if desired.
- Disconnect wires from switch.

4. Adapt LED Driver and Dimmer (if necessary)

- It is required to break off dimmer fins when ganging multiple dimmers in same wall box.

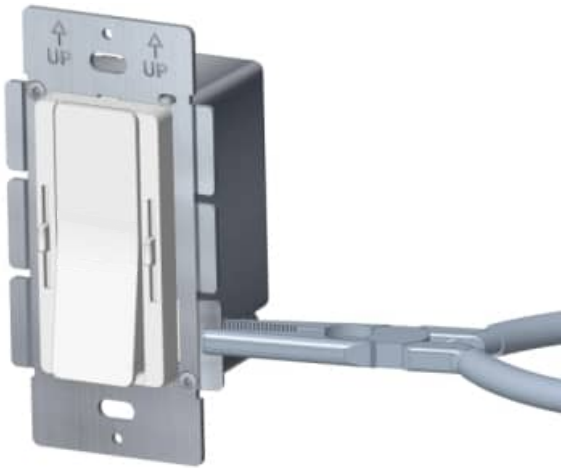

NOTE: ZERO LOAD DERATING

Unlike standard high voltage AC controls, removing LED Driver and Dimmer Switch fins does not reduce the driver's maximum wattage rating.

Removable Partition (Not Included)

5. Attach Voltage Partition (Barrier)

NOTE:NEC CODE725.136

Class 1 and Class 2 circuits in same enclosure must be separated by a barrier unless Class 2 circuits conductors are installed in accordance with 725.41 Class 1 Circuits. For example, Non-Metallic (NM) cable is considered a Class 1 circuit conductor. Therefore, if both high voltage and low voltage are installed with NM cable then the voltage barrier is not required for installation.

Barrier A

Separate high voltage and low voltage spaces

Barrier B

Rotatable, changes the direction of input and output lines, better utilizes space, and facilitates wiring and installation

- **Barrier A installation method**

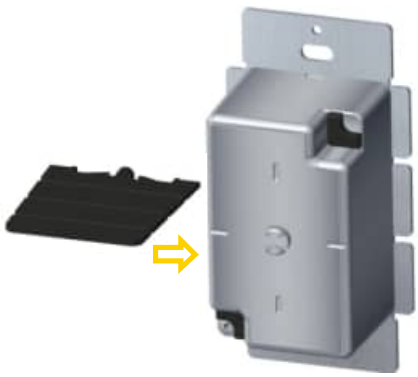

① Align isolation plate A with the opening of the rotating column on the bottom shell.

② Push it in the direction of the arrow until the buckle is stuck on the outer wall of the rotating column.

③ The isolation plate can rotate left and right by a certain angle to adjust the space of the high and low pressure zones.

- **Barrier B installation method**

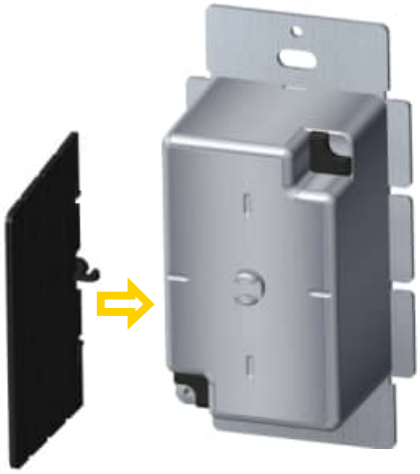

① Align isolation component B with the opening of the rotating column on the bottom shell.

② Push it in the direction of the arrow until the buckle clicks onto the outer wall of the rotating column.

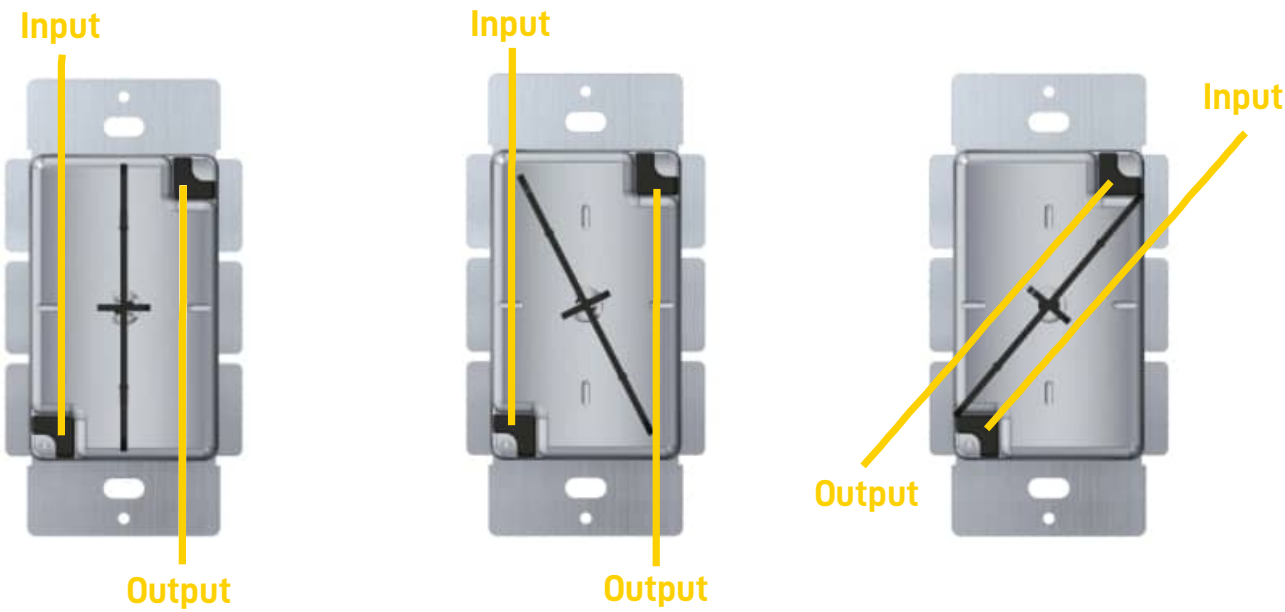

③ Isolation plate B is designed to meet the requirements of different input lines in different regions and positions. The isolation plate can be rotated to achieve the wiring of input lines above or below.

• 5.1 Shallow Wall Boxes

For shallow boxes, barrier can be shortened. Grip with pliers. Bend back and forth until fin breaks off.

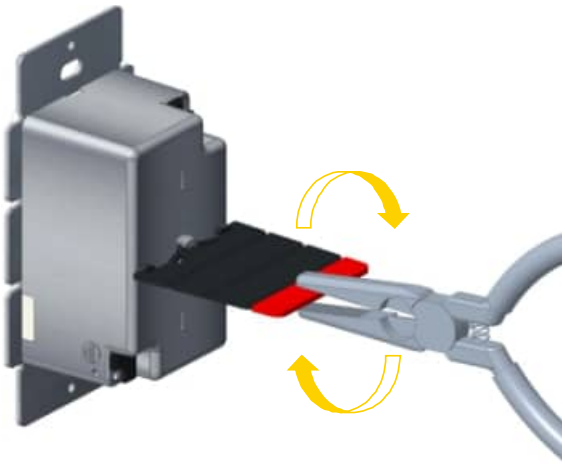

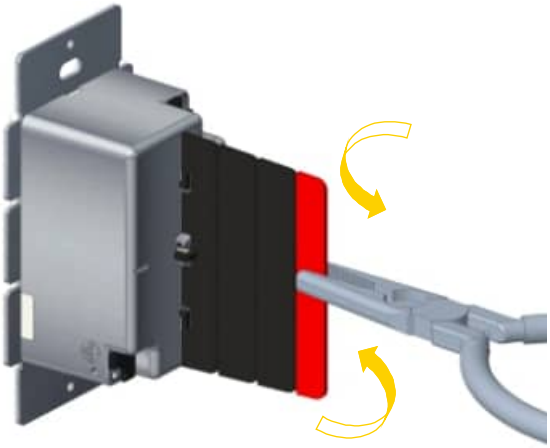

• 5.2 Extra Shallow Wall Boxes

- For extra shallow wall boxes it's acceptable to use the dimmer housing as a barrier. Tuck wires on top and bottom sides of dimmer housing.

6. Wire Dimmer

NOTE: SPECIAL WIRING INSTRUCTIONS

LED Driver+Dimmer switch requires unique wiring steps. Read thoroughtly.

• 6.1 Strip wires on driver

For shallow boxes, barrier can be shortened. Grip with pliers. Bend back and forth until fin breaks off.

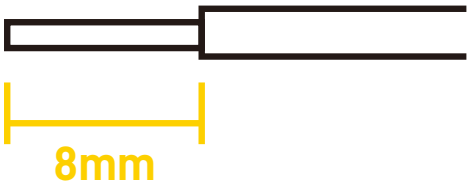

• 6.2 Wire dimmer. Ensure Power is OFF

1. Use included voltage partition when installed into a gang box.
2. Use wire rated for at least 300V.
3.Gang box and vertical partition must comply with UL514C article 6 requirements.

EDD-CCT Series

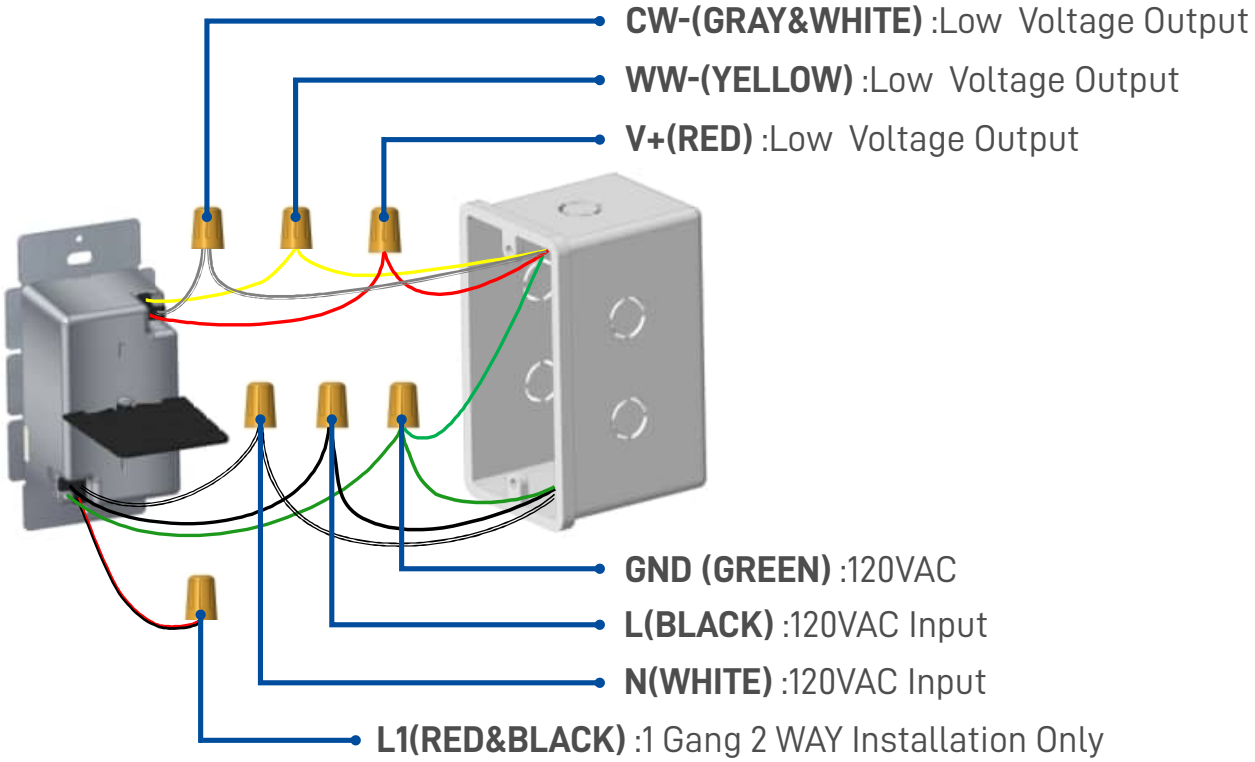

7. Mount Driver+Dimmer Switch to Wallbox and Attach Trim plate

- Step 1: Fix the LED driver+dimmer switch on the wall with screws.
- Step 2: Fix the wallplate on the LED driver + dimmer switch

Trim plate (Not Included) | LED Driver+Dimmer 2 in 1 | Wall Box(Gang Box) (Not Included)

8.Turn Power On at Circuit Breaker

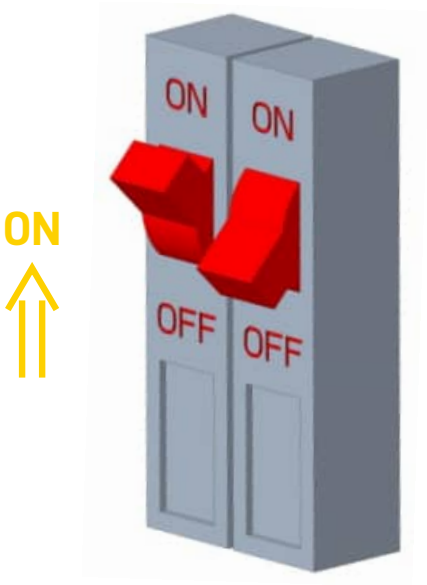
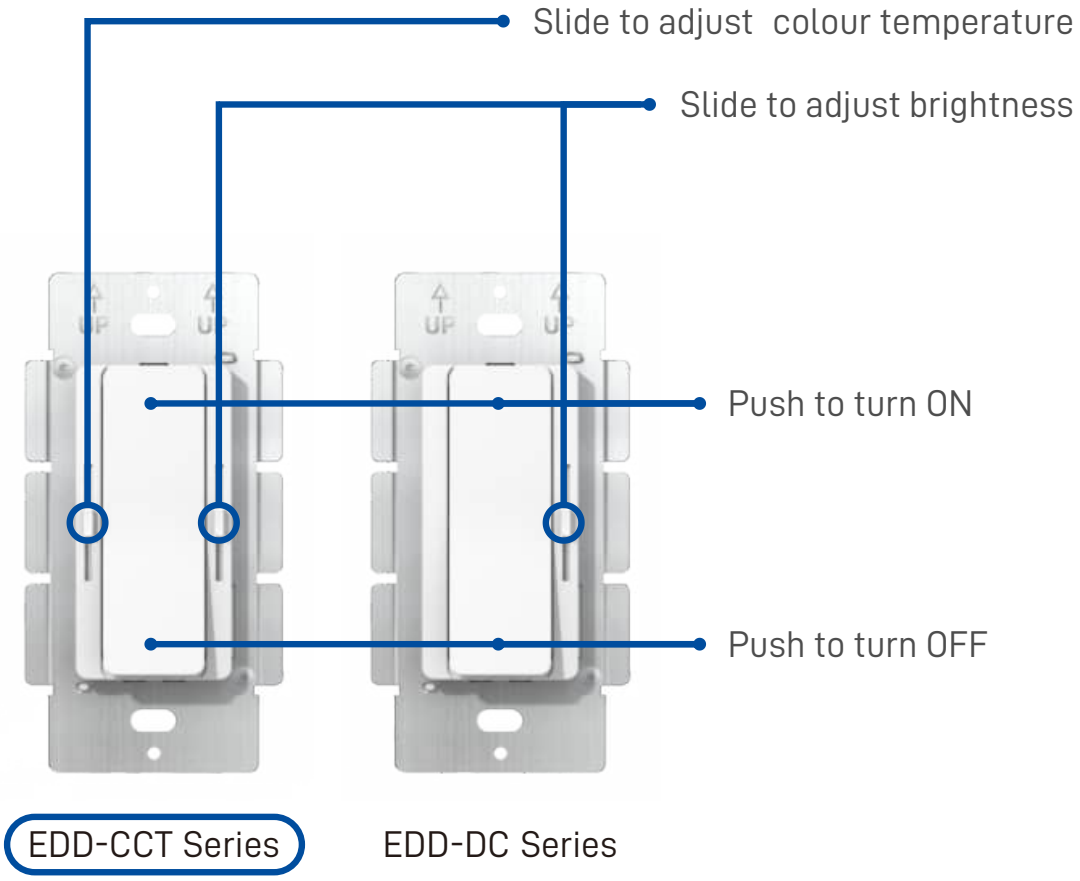
9. Operation and Dimming