# End cap MOD-50

## Ref. C28024C02, C28024C10, C28024C07



- Aesthetic profile finish
- Solid attachment to the profile
- UV resistance

### APPLICATION

- aesthetic finish and protection of the interior of the lighting fixture

### MOUNTING

- to the profile, using bolts (included)

### TECHNICAL DRAWING

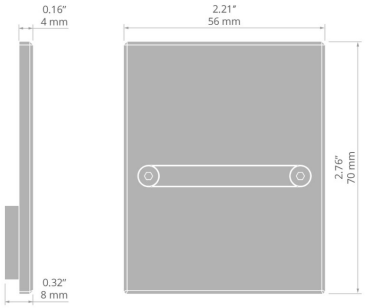


### TECHNICAL SPECIFICATIONS

| | |
|---|---|
| Material | **ABS** |
| Shape | **rectangular** |
| Height | **70 mm** |
| Width | **56 mm** |

| Color | Ref |
|---|---|
| gray | **C28024C02** |
| white | **C28024C10** |
| white | **C28024C10** |
| black | **C28024C07** |

https://klusdesign.eu/en, info@klus.pl
KLUŚ Sp. z o.o., ul. Słoneczna 126, 05-506 Kolonia Lesznowola

# End cap MOD-50

Ref. C28024C02, C28024C10, C28024C07

KLUŚ Inspiring Solutions

## SAMPLE PROJECTS

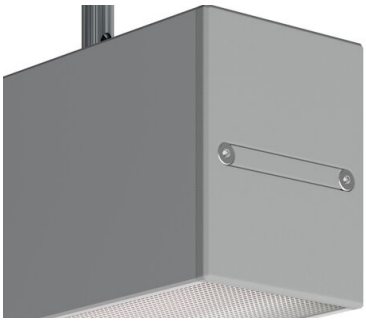

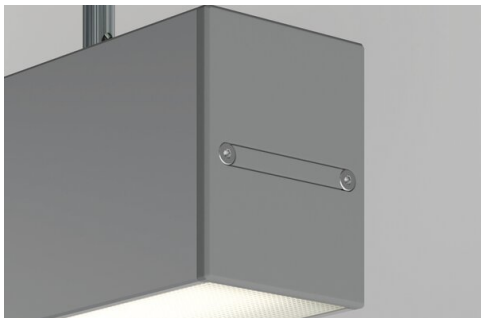

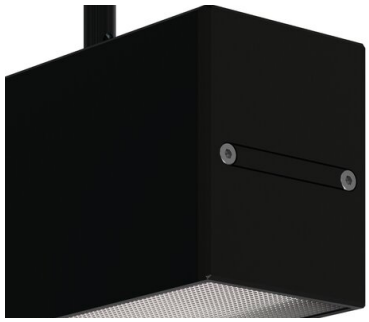

## RELATED PROFILES > FOR MAIN LIGHTING

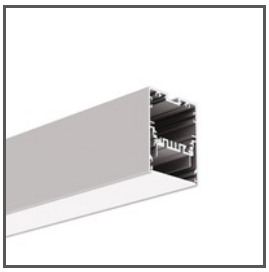

**MOD-50**
A18047

## RELATED SYSTEMS > GENERAL LIGHTING SYSTEMS

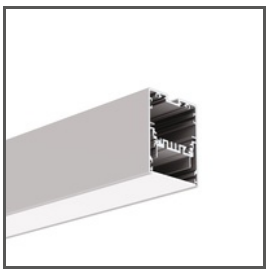

**MOD-50**
18047