Profile MOD-50

Ref. A18047

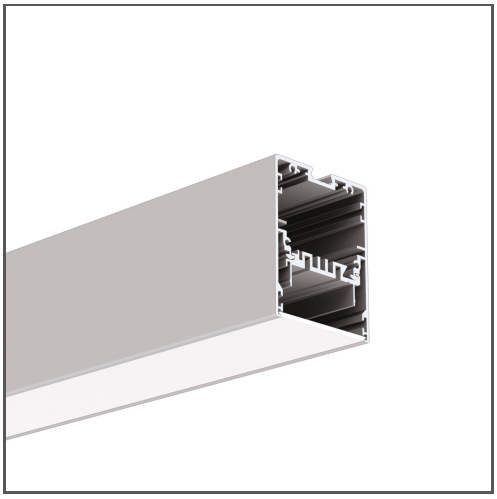

KEY FEATURES

- Installation from below, wall to wall
- Up/down lighting
- Compartment for driver and electrical components
- Easy maintenance
- Possibility to use current modules with efficiency up to 190lm/W and CRI>90. Available upon request.
- Possiblity to obtain UGR < 19

APPLICATION

main and decorative lighting

MOUNTING

suspended, using dedicated accessories

ADDITIONAL INFORMATION

- the luminous efficiency can be increased by 20% with the use of REFLEX 16-60 reflectors
- both LED strips and LED current modules can be used
- safety due to high vibration resistance
- when choosing a different length of profiles / covers than available in the standard, you should additionally choose the cutting service at KLUŚ
- NCS Premium paint option - minimum order quantity 30pcs - available on order within 14 days

Standard lengths of KLUŚ profiles and covers: 1000 mm (tolerance ± 1.5 mm) and 2005 mm / 3010 mm (tolerance + 5 mm); for selected covers: 6050 mm, 10050 mm (tolerance + 5 mm)

IP PROTECTION RATING

IP20

MOUNTING METHOD

Suspended

TECHNICAL DRAWING

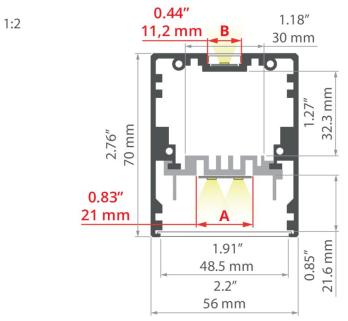

AVAILABLE COLOURS

COLOR	LENGTH	REF
silver anodized	1000 mm	A18047A_1
	2005 mm	A18047A_2
	3010 mm	A18047A_3
white lacquered	1000 mm	A18047L10OD_1
	2005 mm	A18047L10OD_2
black anodized	1000 mm	A18047A07_1
	2005 mm	A18047A07_2
	3010 mm	A18047A07_3
caramel (NCSS3030-Y60R) lacquered	2005 mm	A18047L14OD_2
sand (NCSS2010-Y30R) lacquered		A18047L11OD_2
pastel blue (NCSS2010-B) lacquered		A18047L13OD_2
light sage (NCSS2010-G50Y) lacquered		A18047L12OD_2

TECHNICAL SPECIFICATIONS

Material	aluminum
Possible fixture IP	20
Possible fixture shapes	linear, polygonal
Profile cross-section	rectangular
Width	56 mm
Height	70 mm
LED gluing width A	21 mm
LED gluing width B	11.2 mm
Max. number of LED strips A (8 mm wide)	1
Width of the glow	49.45 mm
Max power of a single KLUŚ LED strip	24 W/m
Dedicated space for power supply	yes
Possibility of obtaining a line of light	yes
Building type	Commercial, Retail, Entertainment/ Arts, HoReCa object
Facility zone	office, lobby / foyer
The cover is cut to the length of the profile	yes
Can be easily connected into runs	yes
Wire out back of extrusion	yes
Two directional lighting for suspended fixtures	yes

Profile MOD-50
Ref. A18047

RELATED ACCESSORIES > COVERS

NAME	KEY FEATURES	MATERIAL	MATERIAL TRANSMITTANCE	COLOR	REF.
Cover HS-11	- For indoor and outdoor applications - UV resistant - hight durability	PC	59 %	frosted	B17208F
			88 %	clear	B17208C
Cover KA-11	- maximum brightness - indoor use - basic - universal	PC	67 %	frosted	B17064F
			89 %	clear	B17064C
Cover LIGER-11	- hight light quality - Ease of obtaining a line of light - Perfectly diffusing - For indoor and outdoor applications	PC	21 %	black	B17037B
			59 %	satin	B17037S
Cover HSP-49	- Ease of obtaining a wide line of light - indoor use	PC	70 %	frosted	B17058F
			82 %	microprism	B17058M
Cover KA-T-11	- maximum brightness - indoor use - economic - universal for basic applications	PVC	54 %	frosted	B17179F
			86 %	clear	B17179C

LINE OF LIGHT TABLE

LED TAPE	HSP-49 FROSTED
K-0360-24	✓ (2)
K-0720-24	✓ (2)
K-1080-24	✓ (2)
K-0500-24	✓ (2)
K-1000-24	✓ (2)
K-HD-0430-24	✓ (2)
K-1500-24	✓ (2)
K-CB-1000-24	✓ (2)
K-HD-0830-24	✓ (2)
K-HD-1260-24	✓ (2)
K-2400-24	✓ (2)
K-RGB-1200-24	✓ (2)
K-18D30-0960-24	✓ (2)
K-27T50-1440-24	✓ (2)

Description

✓ - Line of Light for a number (X) of rows - Pixel free imaging
X - Visible Dotting from Diodes
HL - Centered Line of Light - Concentrated in middle
HL (X) - Centered Line of Light for a number (X) of rows - Concentrated in middle

Line of Light Guide



Clean Line of Light (Pixel free imaging)



Centered Line of Light



Visible Dotting from Diodes

RELATED ACCESSORIES > END CAPS

NAME	MATERIAL	COLOR	REF.
End cap MOD-50 	ABS	black	C28024C07
		caramel (NCSS3030-Y60R)	C28024L14
		gray	C28024C02
		light sage (NCSS2010-G50Y)	C28024L12
		pastel blue (NCSS2010-B)	C28024L13
		sand (NCSS2010-Y30R)	C28024L11
		white	C28024C10

Profile MOD-50
Ref. A18047

RELATED ACCESSORIES > OTHER RELATED ACCESSORIES > CANOPIES

NAME	KEY FEATURES	MATERIAL	COLOR	REF.
Canopy Fi-60mm	- Convenient cable length adjustment, in the ZM system	steel	gray lacquered white lacquered black lacquered	C24540L01 C24540L10 C24540L07
Canopy BOX-M70		aluminum	silver anodized white lacquered black anodized	C24541A C24541L10 C24541A07

RELATED ACCESSORIES > OTHER RELATED ACCESSORIES > FASTENERS AND HEADS FOR PROFILES

NAME	KEY FEATURES	MATERIAL	COLOR	REF.
Fastener M4-12	- Cable length adjustment	stainless steel, brass, nylon	silver chrome white lacquered black lacquered	C28118N00 C28118C10 C28118C07

RELATED ACCESSORIES > OTHER RELATED ACCESSORIES > CONNECTORS

NAME	KEY FEATURES	MATERIAL	COLOR	REF.
Connector ZM		stainless steel	silver	42716 42720 42728 C28070N00 C28071N00 C28072N00 C28073N00 C28074N00 C28075N00 C28243N00
Connector ZM-G		stainless steel	silver	42304 42306 42308 42310 42324 42326 42328 42330 42332 42334 42336 42338
Connector ZM-PION	- for connecting profiles in the vertical plane	stainless steel	silver	42314 42316 42320 42718 42719 C28084N00 C28085N00 C28086N00 C28087N00 C28088N00

RELATED ACCESSORIES > OTHER RELATED ACCESSORIES > SUSPENSION AND MOUNTING SETS

NAME	KEY FEATURES	MATERIAL	COLOR	REF.
Fastener set RG-1	- Cable adjustment at the ceiling, cable included	brass	silver glossy silver satin white colored black colored	C28230P00 C28230P01 C28230L10 C28230L07

RELATED ACCESSORIES > RELATED LED > HIGH EFFICACY

NAME	KEY FEATURES	IP PROTECTION RATING	POWER CONSUMPTION	REF.
LED tape K-VHE-0480-24	- universal for basic applications - high efficacy - High Efficacy	20	4.8 W/m	K-VHE27-0480-24 K-VHE30-0480-24 K-VHE40-0480-24
LED tape K-VHE-0960-24	- universal for basic applications - high efficacy - High Efficacy	20	9.6 W/m	K-VHE40-0960-24
LED tape K-VHE-1440-24	- universal for basic applications - high efficacy - High Efficacy	20	14.4 W/m	K-VHE27-1440-24 K-VHE30-1440-24 K-VHE40-1440-24 K-VHE50-1440-24

RELATED ACCESSORIES > RELATED LED > CRI 95+

NAME	KEY FEATURES	IP PROTECTION RATING	POWER CONSUMPTION	REF.
LED tape K-CR-0480-24	- universal for basic applications - CRI over 95	20	4.8 W/m	K-CR27-0480-24 K-CR30-0480-24 K-CR40-0480-24
LED tape K-CR-0960-24	- universal for basic applications - CRI over 95	20	9.6 W/m	K-CR40-0960-24
LED tape K-CR-1440-24	- universal for basic applications - CRI over 95	20	14.4 W/m	K-CR27-1440-24 K-CR30-1440-24 K-CR40-1440-24

Profile MOD-50
Ref. A18047

KLUŚ Inspiring Solutions

RELATED ACCESSORIES > RELATED LED > WHITE MONO

NAME	KEY FEATURES	IP PROTECTION RATING	POWER CONSUMPTION	REF.
LED tape K-0360-24 3.6 W/m, IP20 NEW		20	3.6 W/m	K-27-0360-24 K-30-0360-24 K-35-0360-24 K-40-0360-24 K-50-0360-24
LED tape K-HD-0430-24 4.3 W/m, IP20 NEW		20	4.3 W/m	K-HD18-0430-24 K-HD22-0430-24 K-HD27-0430-24 K-HD30-0430-24 K-HD35-0430-24 K-HD40-0430-24 K-HD50-0430-24
LED tape K-0480-24	- universal for basic applications	20	4.8 W/m	K-27-0480-24 K-30-0480-24 K-35-0480-24 K-50-0480-24
LED tape K-HD-0480-24	- high LED density - Ease of obtaining a line of light	20	4.8 W/m	K-HD27-0480-24 K-HD40-0480-24
LED tape K-0500-24 5 W/m, IP20 NEW	- Thin line of light - longitudinal bending - Flexibility for bending	20	5 W/m	K-30-0500-24 K-40-0500-24
LED tape K-0720-24 7.2 W/m, IP20 NEW		20	7.2 W/m	K-27-0720-24 K-30-0720-24 K-35-0720-24 K-40-0720-24 K-50-0720-24
LED tape K-HD-0830-24 8.3 W/m, IP20 NEW		20	8.3 W/m	K-HD27-0830-24 K-HD30-0830-24 K-HD35-0830-24 K-HD40-0830-24 K-HD50-0830-24
LED tape K-0960-24	- universal for basic applications	20	9.6 W/m	K-30-0960-24 K-40-0960-24 K-40-0960-24-R30
LED tape K-HD-0960-24	- high LED density - Ease of obtaining a line of light	20	9.6 W/m	K-HD40-0960-24
LED tape K-1000-24 10 W/m, IP20 NEW		20	10 W/m	K-30-1000-24 K-40-1000-24
LED tape K-CB-1000-24 10 W/m, IP20 NEW		20	10 W/m	K-CB27-1000-24 K-CB30-1000-24 K-CB40-1000-24 K-CB50-1000-24
LED tape K-1080-24 10.8 W/m, IP20 NEW		20	10.8 W/m	K-27-1080-24 K-30-1080-24 K-35-1080-24 K-40-1080-24 K-50-1080-24
LED tape K-HD-1260-24 12.6 W/m, IP20 NEW		20	12.6 W/m	K-HD27-1260-24 K-HD30-1260-24 K-HD35-1260-24 K-HD40-1260-24 K-HD50-1260-24
LED tape K-1440-24	- universal for basic applications	20	14.4 W/m	K-27-1440-24 K-40-1440-24 K-40-1440-24-R30
LED tape K-HD-1440-24	- high LED density - Ease of obtaining a line of light	20	14.4 W/m	K-HD40-1440-24
LED tape K2-1440-24 14.4 W/m, IP20 NEW		20	14.4 W/m	K2-27-1440-24 K2-30-1440-24 K2-35-1440-24 K2-40-1440-24 K2-50-1440-24
LED tape K-1500-24 15 W/m, IP20 NEW		20	15 W/m	K-30-1500-24 K-35-1500-24 K-40-1500-24
LED tape K2-1920-24	- LED double-row strip - quick installation	20	19.2 W/m	K2-30-1920-24 K2-40-1920-24
LED tape K3-2160-24 21.6 W/m, IP20 NEW ON ORDER	- Three-row LED strip - quick installation	20	21.6 W/m	K3-35-2160-24
LED tape K-2300-24	- high power	20	23 W/m	K-30-2300-24 K-40-2300-24
LED tape K-2400-24	- high power	20	24 W/m	K-27-2400-24 K-30-2400-24 K-35-2400-24 K-40-2400-24 K-50-2400-24
LED tape K3-2880-24	- Three-row LED strip - quick installation	20	28.8 W/m	K3-27-2880-24 K3-40-2880-24 K3-50-2880-24

Profile MOD-50
Ref. A18047

RELATED ACCESSORIES > RELATED LED > RGB / RGB-W / RGB-CCT

NAME	KEY FEATURES	IP PROTECTION RATING	POWER CONSUMPTION	REF.
LED tape K-RGB-1200-24	- RGB	20	12 W/m	K-RGB-1200-24
LED tape K-RGBW-1530-24 15.3 W/m, IP20 NEW	- RGBW - high LED density	20	15.3 W/m	K-RGB30-1530-24 K-RGB40-1530-24

RELATED ACCESSORIES > RELATED LED > ADJUSTABLE WHITE / DIM TO WARM

NAME	KEY FEATURES	IP PROTECTION RATING	POWER CONSUMPTION	REF.
LED tape K-18D30-0960-24	- Dim To Warm LED Tape	20	9.6 W/m	K-18D30-0960-24
LED tape K-27T50-1440-24	- RGB+Tunable White	20	14.4 W/m	K-27T50-1440-24

RELATED ACCESSORIES > ELECTRONICS > SWITCHES

NAME	KEY FEATURES	IP PROTECTION RATING	REF.
Proximity switch UNI-11	- touchless switch - width 11mm	20	E61603
Proximity switch UNI-P	- touchless switch - width only 7mm - factory pre-soldered wires	20	E61580
Proximity switch UNI	- touchless switch - width only 7mm	20	E61579
Proximity switch UNI-11P	- touchless switch - width 11mm - factory pre-soldered wires	20	E61604