Profile GLADES
Ref. A18036

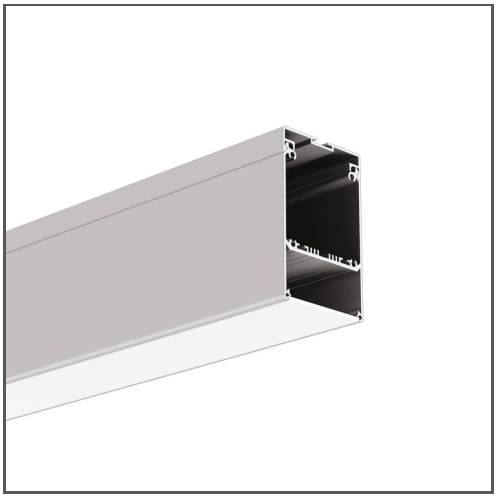

KEY FEATURES

- Smooth profile back
- Compartment for driver and electrical components
- Designed for IP54 protection rating
- Easy maintenance
- Wide range of accessories
- Possibility to use current modules with efficiency up to 190lm/W and CRI>90. Available upon request.
- Possiblity to obtain UGR < 19

APPLICATION

main and decorative lighting

MOUNTING

suspended or to the surface, using a dedicated mounting track, dedicated accessories or properly selected screws

ADDITIONAL INFORMATION

- the power supply can be secured inside the profile using dedicated accessories
- when choosing a different length of profiles / covers than available in the standard, you should additionally choose the cutting service at KLUŚ
- NCS Premium paint option - minimum order quantity 30pcs - available on order within 14 days

Standard lengths of KLUŚ profiles and covers: 1000 mm (tolerance ± 1.5 mm) and 2005 mm / 3010 mm (tolerance + 5 mm); for selected covers: 6050 mm, 10050 mm (tolerance + 5 mm)

IP PROTECTION RATING

IP20 IP54

MOUNTING METHOD

Suspended

Surface mounted

TECHNICAL DRAWING

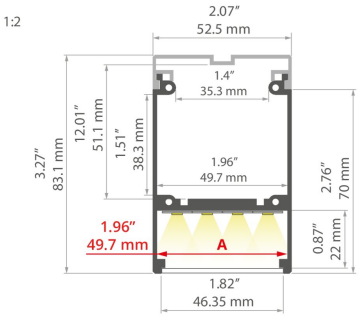

AVAILABLE COLOURS

COLOR	LENGTH	REF
silver anodized	1000 mm	A18036A_1
	2005 mm	A18036A_2
	3010 mm	A18036A_3
caramel (NCSS3030-Y60R) lacquered	2005 mm	A18036L14OD_2
sand (NCSS2010-Y30R) lacquered		A18036L11OD_2
pastel blue (NCSS2010-B) lacquered		A18036L13OD_2
light sage (NCSS2010-G50Y) lacquered		A18036L12OD_2

TECHNICAL SPECIFICATIONS

Material	aluminum
Possible fixture IP	20, 54
Possible fixture shapes	linear, polygonal
Profile cross-section	rectangular
Width	52.5 mm
Height	83.1 mm
LED gluing width A	49.7 mm
Max. number of LED strips A (8 mm wide)	6
Width of the glow	46.55 mm
Max power of a single KLUŚ LED strip	24 W/m
Dedicated space for power supply	yes
Building type	Commercial, Retail, Entertainment/ Arts, HoReCa object
Facility zone	office, outdoor spaces
The cover is cut to the length of the profile	yes
Can be easily connected into runs	yes
Wire out back of extrusion	yes

RELATED ACCESSORIES > COVERS

NAME	MATERIAL	MATERIAL TRANSMITTANCE	COLOR	REF.
Cover DHS	PC	68 %	frosted	B17052M
		94 %	clear	B17052T

Profile GLADES
Ref. A18036

RELATED ACCESSORIES > END CAPS

NAME		MATERIAL	COLOR	REF.
End cap DES		stainless steel	silver	C28209A01

RELATED ACCESSORIES > OTHER RELATED ACCESSORIES > CANOPIES

NAME	KEY FEATURES	MATERIAL	COLOR	REF.
Canopy Fi-60mm	- Convenient cable length adjustment, in the ZM system	steel	gray lacquered white lacquered black lacquered	C24540L01 C24540L10 C24540L07
Canopy BOX-M70		aluminum	silver anodized white lacquered black anodized	C24541A C24541L10 C24541A07

RELATED ACCESSORIES > OTHER RELATED ACCESSORIES > FASTENERS AND HEADS FOR PROFILES

NAME	MATERIAL	COLOR	REF.
Fastener UCHO-ZD, silver	aluminum	silver anodized	C28193N00

RELATED ACCESSORIES > OTHER RELATED ACCESSORIES > CONDUCTIVE FASTENERS AND HEADS FOR PROFILES

NAME	MATERIAL	COLOR	REF.
Head BZP-ZO	stainless steel	silver	42214
Fastener PUSZ-LIN-ZD, silver	stainless steel	silver	42257
Fastener PUSZ-LIN-ZD	stainless steel, brass, nylon aluminum, brass, nylon aluminum, brass, nylon	silver white lacquered black lacquered	C28164N00 C28164L10 C28164L07

RELATED ACCESSORIES > OTHER RELATED ACCESSORIES > CONNECTORS

NAME	MATERIAL	COLOR	REF.
Connector ZM-NA	stainless steel	silver	42305 42339 42725 C28242N00

RELATED ACCESSORIES > OTHER RELATED ACCESSORIES > SUSPENSION AND MOUNTING SETS

NAME	KEY FEATURES	MATERIAL	COLOR	REF.
Fastener set RG-1	- Cable adjustment at the ceiling, cable included	brass	silver glossy silver satin white colored black colored	C28230P00 C28230P01 C28230L10 C28230L07
Fastener set PUSZ-ZD-1		aluminum aluminum stainless steel	black lacquered white lacquered colorless colored	C24775L07 C24775L10 C24775N00
Fastener set PUSZ-ZD-2		aluminum aluminum stainless steel	black lacquered white lacquered colorless colored	C24776L07 C24776L10 C24776N00

RELATED ACCESSORIES > OTHER RELATED ACCESSORIES > SECURITY AND BLOCKS

NAME	KEY FEATURES	MATERIAL	COLOR	REF.
Block ZD, gray	- Accessory locking in the ZD system	stainless steel	gray	C28195N00
Block ZM, gray	- Accessory locking in the ZM system	silicon	gray	C28194N00

RELATED ACCESSORIES > RELATED LED > HIGH EFFICACY

NAME	KEY FEATURES	IP PROTECTION RATING	POWER CONSUMPTION	REF.
LED tape K-VHE-0480-24	- universal for basic applications - high efficacy - High Efficacy	20	4.8 W/m	K-VHE27-0480-24 K-VHE30-0480-24 K-VHE40-0480-24
LED tape K-VHE-0960-24	- universal for basic applications - high efficacy - High Efficacy	20	9.6 W/m	K-VHE40-0960-24
LED tape K-VHE-1440-24	- universal for basic applications - high efficacy - High Efficacy	20	14.4 W/m	K-VHE27-1440-24 K-VHE30-1440-24 K-VHE40-1440-24 K-VHE50-1440-24

Profile GLADES
Ref. A18036

RELATED ACCESSORIES > RELATED LED > CRI 95+

NAME	KEY FEATURES	IP PROTECTION RATING	POWER CONSUMPTION	REF.
LED tape K-CR-0480-24	- universal for basic applications - CRI over 95	20	4.8 W/m	K-CR27-0480-24 K-CR30-0480-24 K-CR40-0480-24
LED tape K-CR-0960-24	- universal for basic applications - CRI over 95	20	9.6 W/m	K-CR40-0960-24
LED tape K-CR-1440-24	- universal for basic applications - CRI over 95	20	14.4 W/m	K-CR27-1440-24 K-CR30-1440-24 K-CR40-1440-24
LED tape KWP-CR-0480-24	- universal for basic applications - CRI over 95	65	4.8 W/m	KWP-CR27-0480-24 KWP-CR30-0480-24 KWP-CR35-0480-24 KWP-CR40-0480-24 KWP-CR50-0480-24
LED tape KWP-CR-0960-24	- universal for basic applications - CRI over 95	65	9.6 W/m	KWP-CR40-0960-24 KWP-CR50-0960-24

RELATED ACCESSORIES > RELATED LED > WHITE MONO

NAME	KEY FEATURES	IP PROTECTION RATING	POWER CONSUMPTION	REF.
LED tape K-0360-24 3.6 W/m, IP20 NEW		20	3.6 W/m	K-27-0360-24 K-30-0360-24 K-35-0360-24 K-40-0360-24 K-50-0360-24
LED tape K-HD-0430-24 4.3 W/m, IP20 NEW		20	4.3 W/m	K-HD18-0430-24 K-HD22-0430-24 K-HD27-0430-24 K-HD30-0430-24 K-HD35-0430-24 K-HD40-0430-24 K-HD50-0430-24
LED tape K-0480-24	- universal for basic applications	20	4.8 W/m	K-27-0480-24 K-30-0480-24 K-35-0480-24 K-50-0480-24
LED tape K-HD-0480-24	- high LED density - Ease of obtaining a line of light	20	4.8 W/m	K-HD27-0480-24 K-HD40-0480-24
LED tape K-0500-24 5 W/m, IP20 NEW	- Thin line of light - longitudinal bending - Flexibility for bending	20	5 W/m	K-30-0500-24 K-40-0500-24
LED tape K-0720-24 7.2 W/m, IP20 NEW		20	7.2 W/m	K-27-0720-24 K-30-0720-24 K-35-0720-24 K-40-0720-24 K-50-0720-24
LED tape K-HD-0830-24 8.3 W/m, IP20 NEW		20	8.3 W/m	K-HD27-0830-24 K-HD30-0830-24 K-HD35-0830-24 K-HD40-0830-24 K-HD50-0830-24
LED tape K-0960-24	- universal for basic applications	20	9.6 W/m	K-30-0960-24 K-40-0960-24 K-40-0960-24-R30
LED tape K-HD-0960-24	- high LED density - Ease of obtaining a line of light	20	9.6 W/m	K-HD40-0960-24
LED tape K-1000-24 10 W/m, IP20 NEW		20	10 W/m	K-30-1000-24 K-40-1000-24
LED tape K-CB-1000-24 10 W/m, IP20 NEW		20	10 W/m	K-CB27-1000-24 K-CB30-1000-24 K-CB40-1000-24 K-CB50-1000-24
LED tape K-1080-24 10.8 W/m, IP20 NEW		20	10.8 W/m	K-27-1080-24 K-30-1080-24 K-35-1080-24 K-40-1080-24 K-50-1080-24
LED tape K-HD-1260-24 12.6 W/m, IP20 NEW		20	12.6 W/m	K-HD27-1260-24 K-HD30-1260-24 K-HD35-1260-24 K-HD40-1260-24 K-HD50-1260-24
LED tape K-1440-24	- universal for basic applications	20	14.4 W/m	K-27-1440-24 K-40-1440-24 K-40-1440-24-R30
LED tape K-HD-1440-24	- high LED density - Ease of obtaining a line of light	20	14.4 W/m	K-HD40-1440-24
LED tape K2-1440-24 14.4 W/m, IP20 NEW		20	14.4 W/m	K2-27-1440-24 K2-30-1440-24 K2-35-1440-24 K2-40-1440-24 K2-50-1440-24
LED tape K-1500-24 15 W/m, IP20 NEW		20	15 W/m	K-30-1500-24 K-35-1500-24 K-40-1500-24
LED tape K2-1920-24	- LED double-row strip - quick installation	20	19.2 W/m	K2-30-1920-24 K2-40-1920-24

Profile GLADES
Ref. A18036

NAME	KEY FEATURES	IP PROTECTION RATING	POWER CONSUMPTION	REF.
LED tape K3-2160-24 21.6 W/m, IP20 NEW ON ORDER	- Three-row LED strip - quick installation	20	21.6 W/m	K3-35-2160-24
LED tape K-2300-24	- high power	20	23 W/m	K-30-2300-24 K-40-2300-24
LED tape K-2400-24	- high power	20	24 W/m	K-27-2400-24 K-30-2400-24 K-35-2400-24 K-40-2400-24 K-50-2400-24
LED tape K3-2880-24	- Three-row LED strip - quick installation	20	28.8 W/m	K3-27-2880-24 K3-40-2880-24 K3-50-2880-24
LED tape KWP-0360-24 3.6 W/m, IP65 NEW		65	3.6 W/m	KWP-27-0360-24 KWP-30-0360-24 KWP-35-0360-24 KWP-40-0360-24 KWP-50-0360-24
LED tape KWP-GHD-0430-24 4.3 W/m, IP65 NEW		65	4.3 W/m	KWP-GHD27-0430-24 KWP-GHD30-0430-24 KWP-GHD35-0430-24 KWP-GHD40-0430-24 KWP-GHD50-0430-24
LED tape KWP-HD-0430-24 4.3 W/m, IP65 NEW		65	4.3 W/m	KWP-HD27-0430-24 KWP-HD30-0430-24 KWP-HD35-0430-24 KWP-HD40-0430-24 KWP-HD50-0430-24
LED tape KWP-0480-24	- universal for basic applications	65	4.8 W/m	KWP-27-0480-24 KWP-30-0480-24 KWP-50-0480-24
LED tape KWP-GHD-0480-24	- high LED density - Ease of obtaining a line of light	65	4.8 W/m	KWP-GHD27-0480-24
LED tape KWP-0500-24 5 W/m, IP65 NEW		65	5 W/m	KWP-30-0500-24 KWP-40-0500-24
LED tape KWP-G-0500-24 5 W/m, IP65 NEW		65	5 W/m	KWP-G30-0500-24 KWP-G40-0500-24
LED tape KWP-0720-24 7.2 W/m, IP65 NEW		65	7.2 W/m	KWP-27-0720-24 KWP-30-0720-24 KWP-35-0720-24 KWP-40-0720-24 KWP-50-0720-24
LED tape KWP-GHD-0830-24 8.3 W/m, IP65 NEW		65	8.3 W/m	KWP-GHD27-0830-24 KWP-GHD30-0830-24 KWP-GHD35-0830-24 KWP-GHD40-0830-24 KWP-GHD50-0830-24
LED tape KWP-HD-0830-24 8.3 W/m, IP65 NEW		65	8.3 W/m	KWP-HD27-0830-24 KWP-HD30-0830-24 KWP-HD35-0830-24 KWP-HD40-0830-24 KWP-HD50-0830-24
LED tape KWP-0960-24	- universal for basic applications	65	9.6 W/m	KWP-40-0960-24
LED tape KWP-1000-24 10 W/m, IP65 NEW		65	10 W/m	KWP-30-1000-24 KWP-40-1000-24
LED tape KWP-CB-1000-24 10 W/m, IP65 NEW		65	10 W/m	KWP-CB27-1000-24 KWP-CB30-1000-24 KWP-CB40-1000-24 KWP-CB50-1000-24
LED tape KWP-G-1000-24 10 W/m, IP65 NEW		65	10 W/m	KWP-G30-1000-24 KWP-G40-1000-24
LED tape KWP-1080-24 10.8 W/m, IP65 NEW		65	10.8 W/m	KWP-27-1080-24 KWP-30-1080-24 KWP-35-1080-24 KWP-40-1080-24 KWP-50-1080-24
LED tape KWP-GHD-1260-24 12.6 W/m, IP65 NEW		65	12.6 W/m	KWP-GHD27-1260-24 KWP-GHD30-1260-24 KWP-GHD35-1260-24 KWP-GHD40-1260-24 KWP-GHD50-1260-24
LED tape KWP-HD-1260-24 12.6 W/m, IP65		65	12.6 W/m	KWP-HD27-1260-24 KWP-HD30-1260-24 KWP-HD35-1260-24 KWP-HD40-1260-24 KWP-HD50-1260-24
LED tape KWP-1440-24	- universal for basic applications	65	14.4 W/m	KWP-27-1440-24 KWP-40-1440-24
LED tape KWP-1500-24 15 W/m, IP65 NEW		65	15 W/m	KWP-30-1500-24 KWP-40-1500-24
LED tape KWP-G-1500-24 15 W/m, IP65 NEW		65	15 W/m	KWP-G30-1500-24 KWP-G40-1500-24

Profile GLADES
Ref. A18036

RELATED ACCESSORIES > RELATED LED > RGB / RGB-W / RGB-CCT

NAME	KEY FEATURES	IP PROTECTION RATING	POWER CONSUMPTION	REF.
LED tape K-RGB-1200-24	- RGB	20	12 W/m	K-RGB-1200-24
LED tape K-RGBW-1530-24 15.3 W/m, IP20 NEW	- RGBW - high LED density	20	15.3 W/m	K-RGB30-1530-24 K-RGB40-1530-24
LED tape KWP-RGB-1200-24	- RGB	65	12 W/m	KWP-RGB-1200-24
LED tape KWP-GRGB-1530-24 15.3 W/m, IP65 NEW	- RGBW - high LED density	65	15.3 W/m	KWP-GRGB30-1530-24 KWP-GRGB40-1530-24
LED tape KWP-RGBW-1530-24 15.3 W/m, IP65 NEW	- RGBW - high LED density	65	15.3 W/m	KWP-RGB30-1530-24 KWP-RGB40-1530-24

RELATED ACCESSORIES > RELATED LED > ADJUSTABLE WHITE / DIM TO WARM

NAME	KEY FEATURES	IP PROTECTION RATING	POWER CONSUMPTION	REF.
LED tape K-18D30-0960-24	- Dim To Warm LED Tape	20	9.6 W/m	K-18D30-0960-24
LED tape K-27T50-1440-24	- RGB+Tunable White	20	14.4 W/m	K-27T50-1440-24
LED tape KWP-18D30-0960-24	- Dim To Warm LED Tape	65	9.6 W/m	KWP-18D30-0960-24

RELATED ACCESSORIES > ELECTRONICS > SWITCHES

NAME	KEY FEATURES	IP PROTECTION RATING	REF.
Proximity switch UNI-11	- touchless switch - width 11mm	20	E61603
Proximity switch UNI-P	- touchless switch - width only 7mm - factory pre-soldered wires	20	E61580
Proximity switch UNI	- touchless switch - width only 7mm	20	E61579
Proximity switch UNI-11P	- touchless switch - width 11mm - factory pre-soldered wires	20	E61604