Profile LIPOD

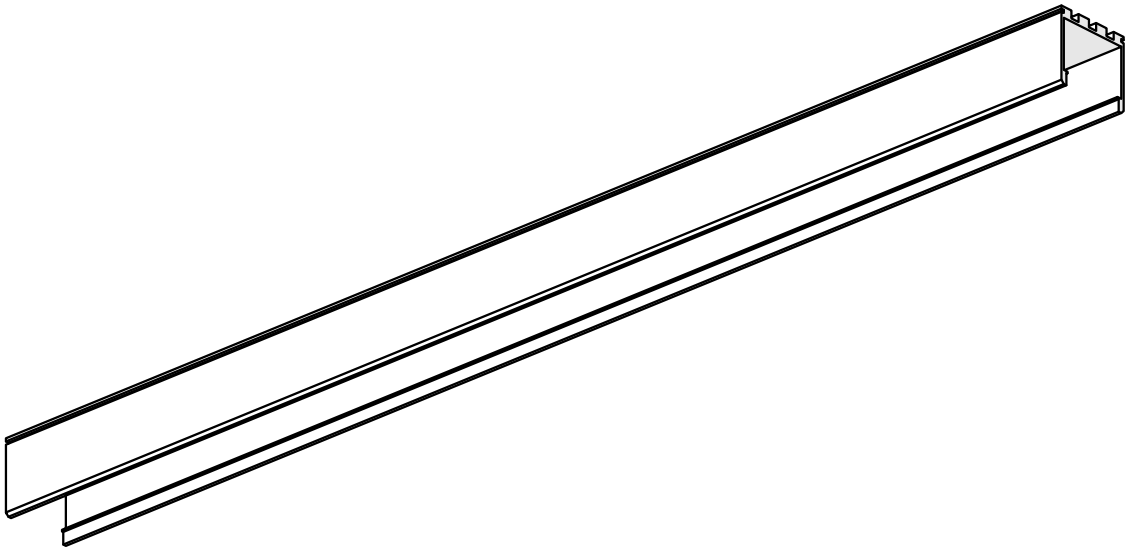

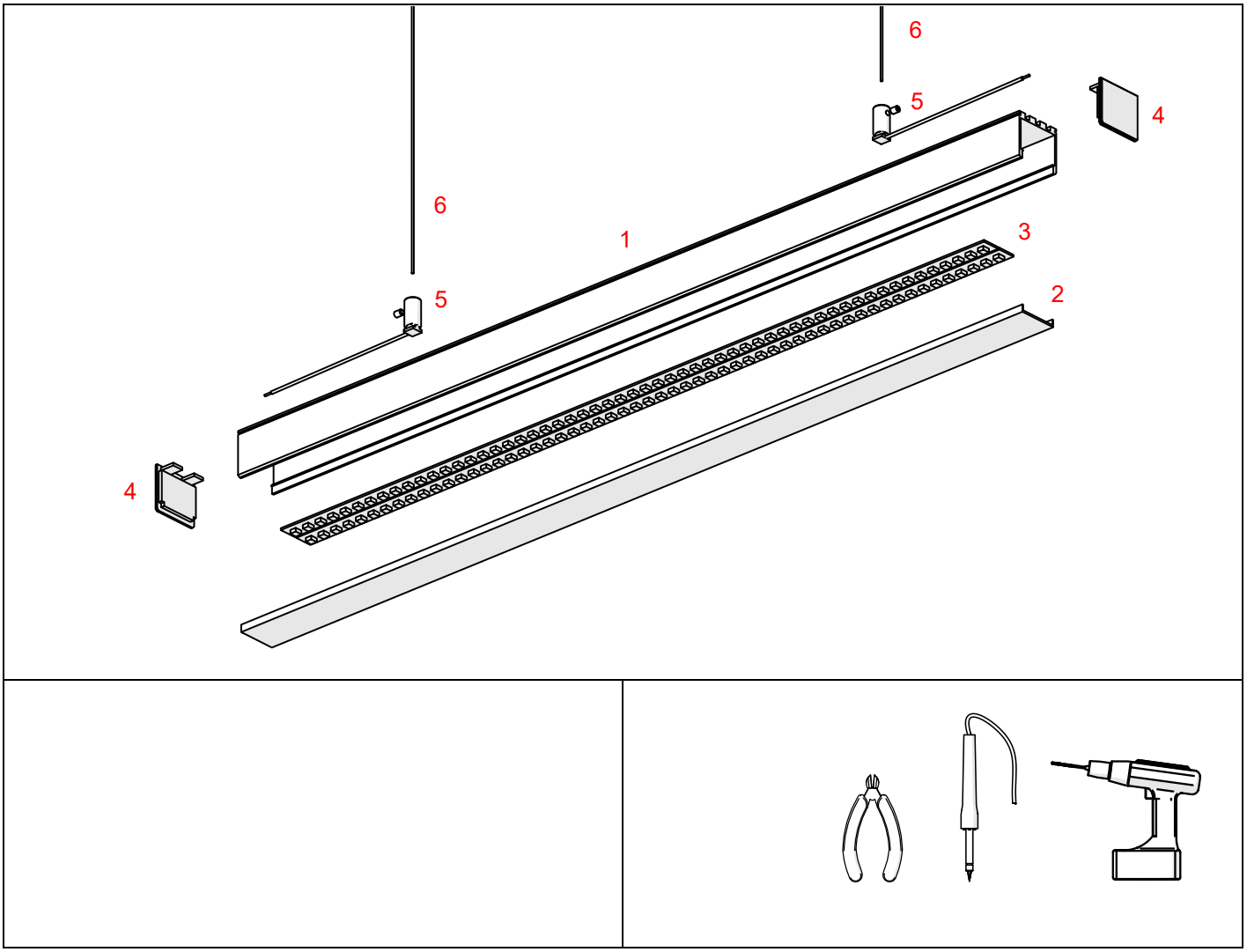

1. Profile LIPOD (Ref. A05554)
2. Cover*
3. LED tape*
4. End cap LIPOD (Ref. C24004)
5. Fastener FI-8-LIN-ZMZ (Ref. C28171)
6. Wire CU*

* The full range of accessories and electronics is available at www.KlusDesign.eu

NOTE! ! All LED tapes must be connected to a 24 V power supply.

IMPORTANT: Not all possible mounting procedures are presented here.
More mounting procedures and related accessories can be found at www.KlusDesign.eu.
Drawings in these instructions are simplified and only approximate the actual shapes.

I

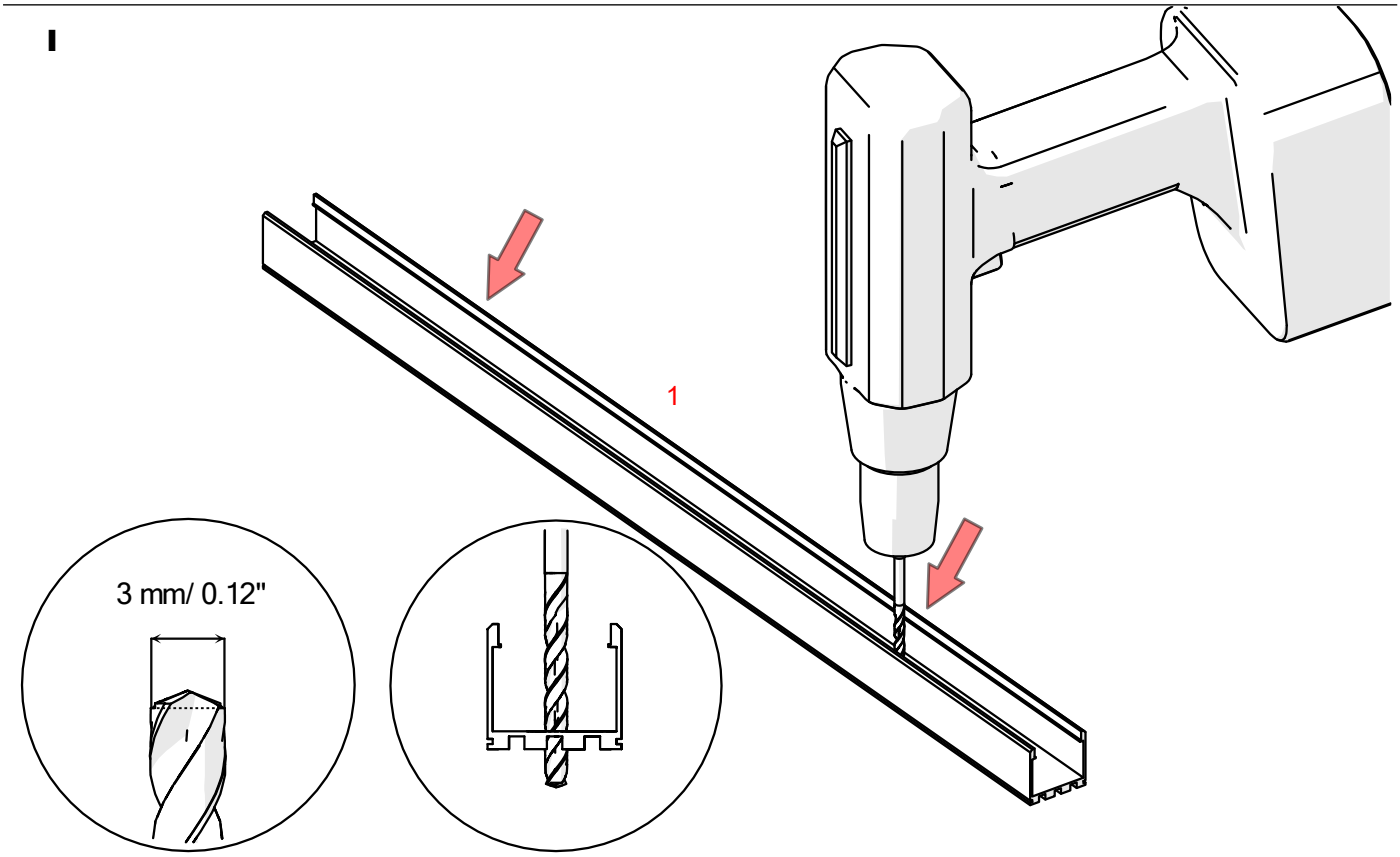

II

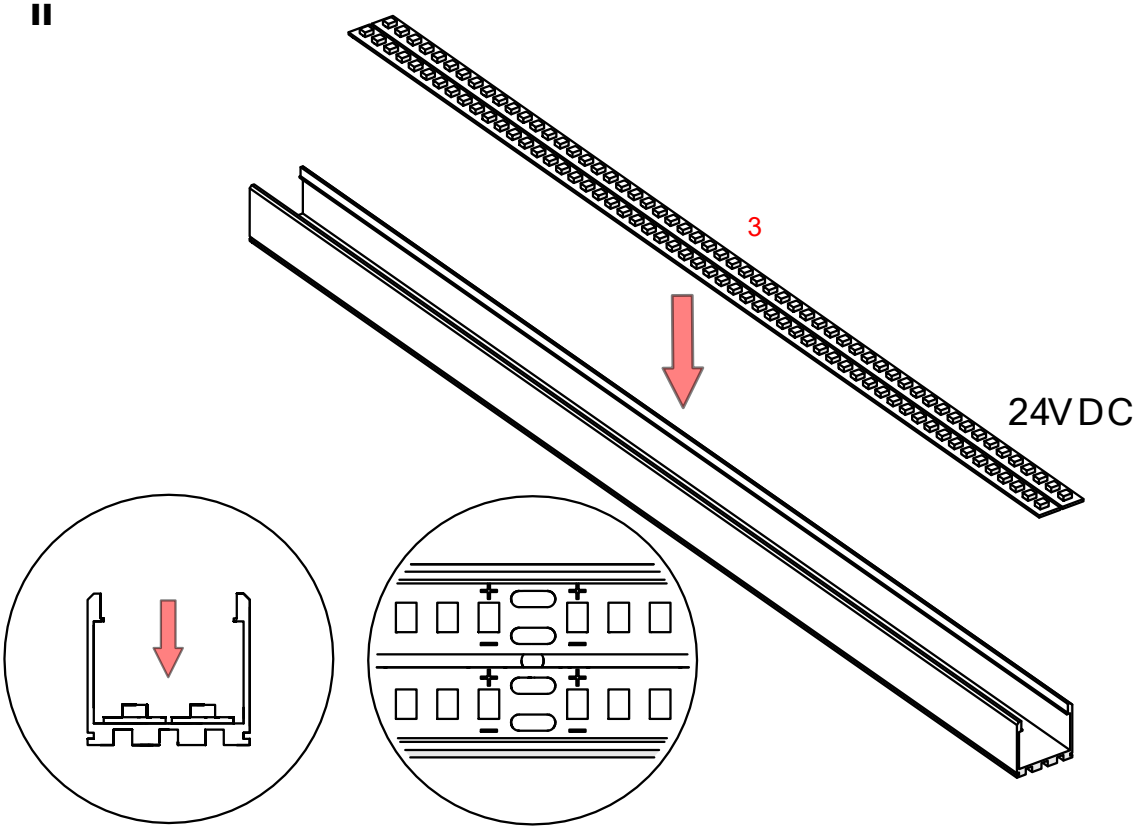

III

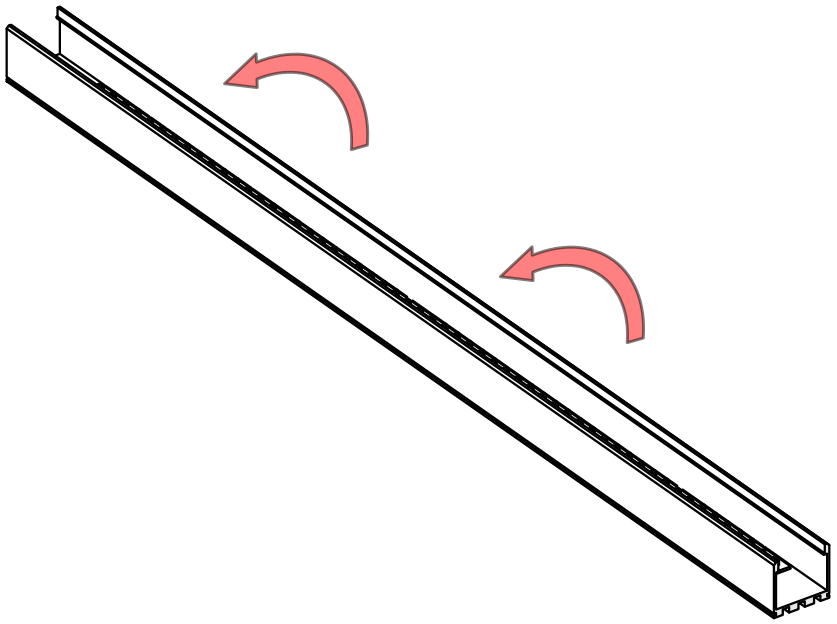

IV

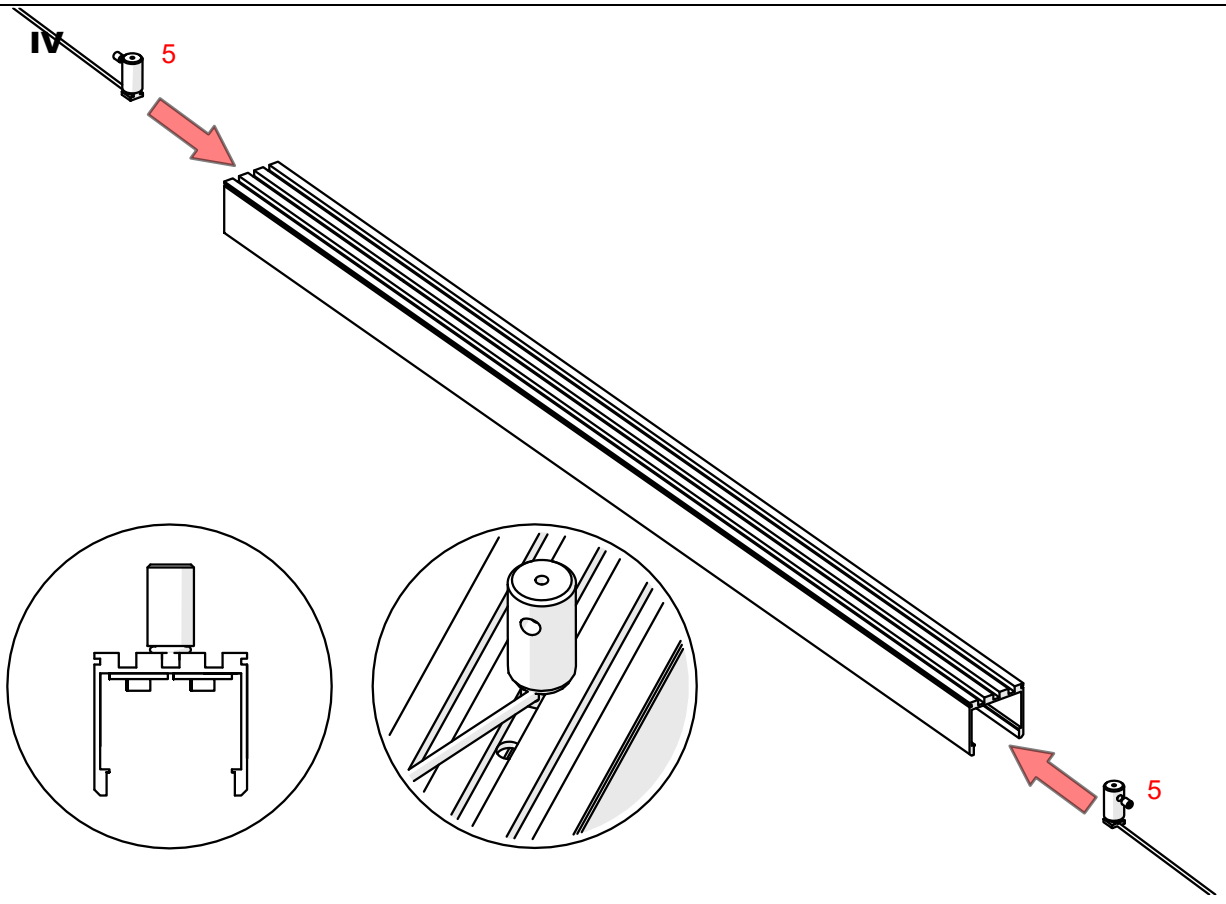

V

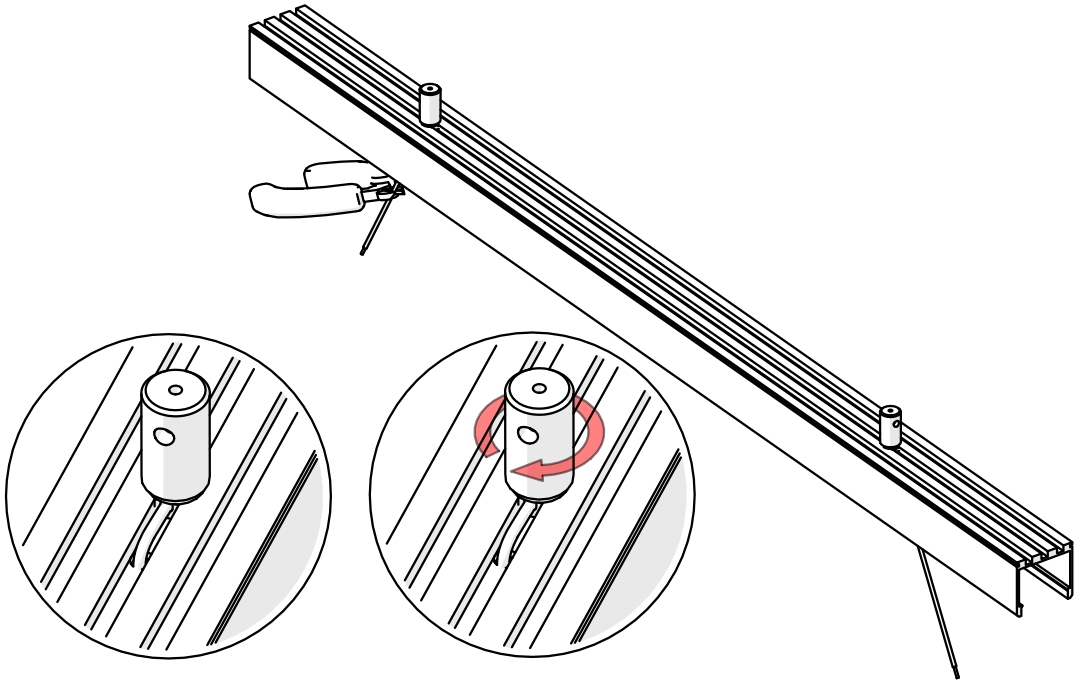

VI

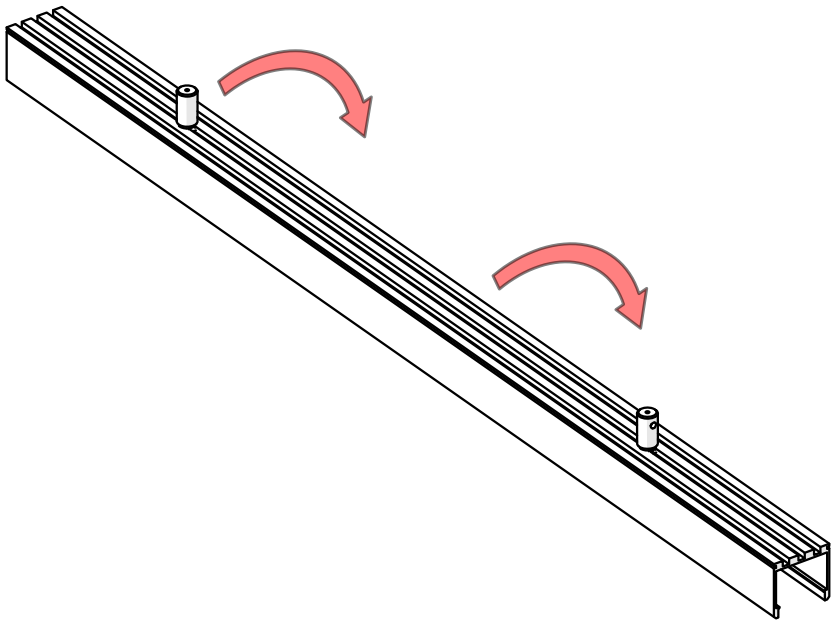

VII

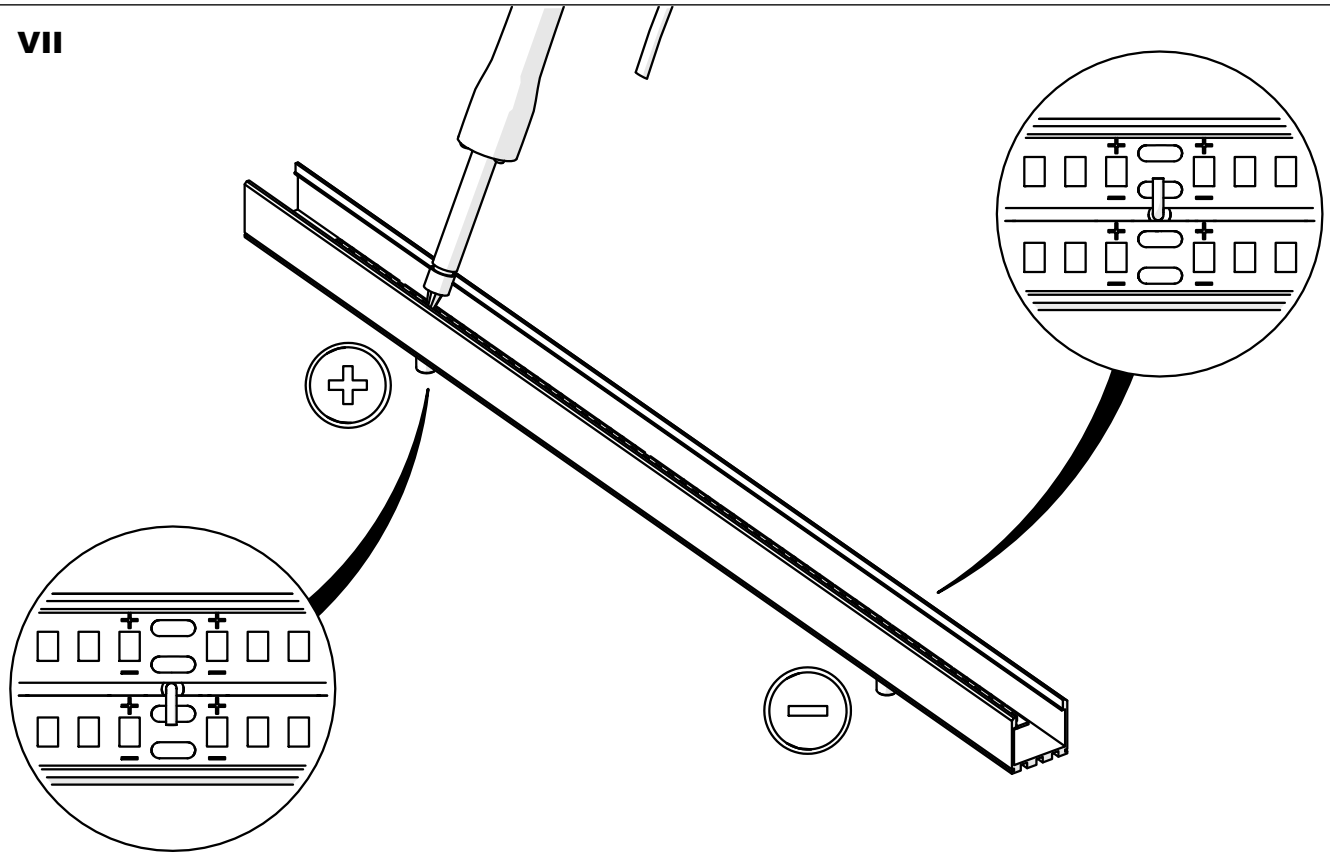

VIII

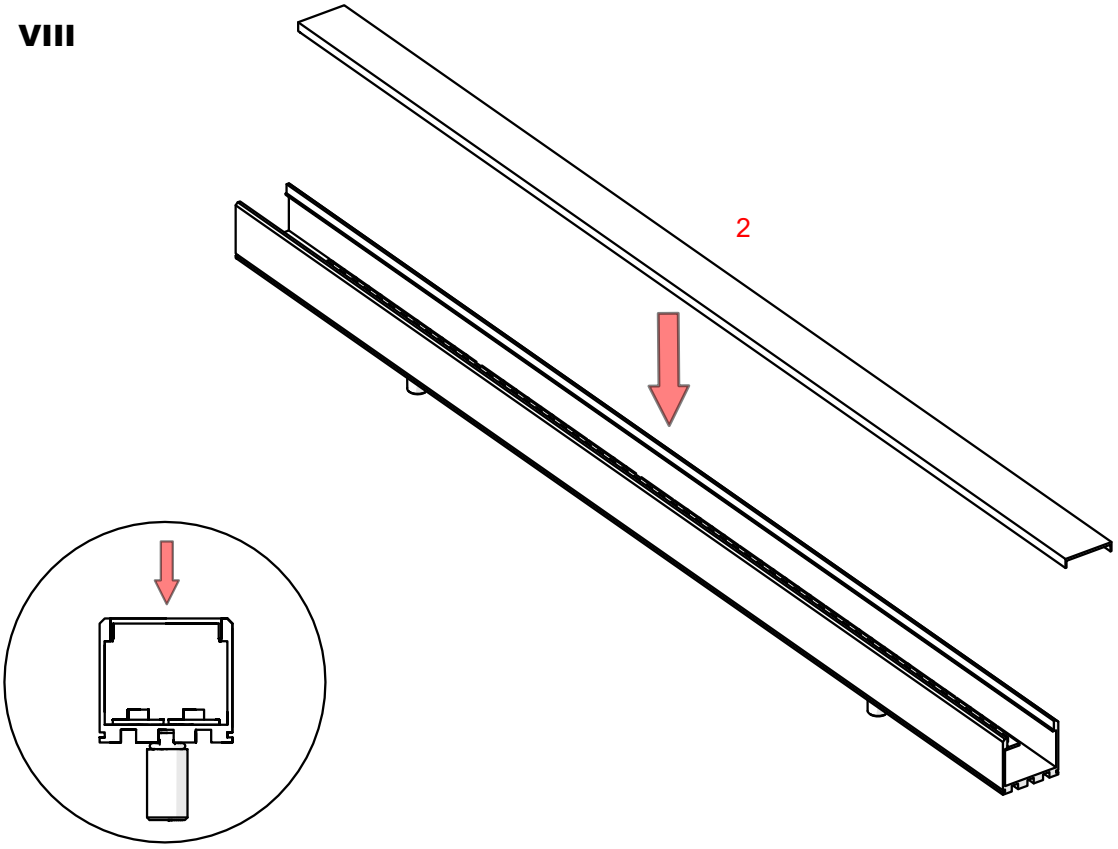

IX

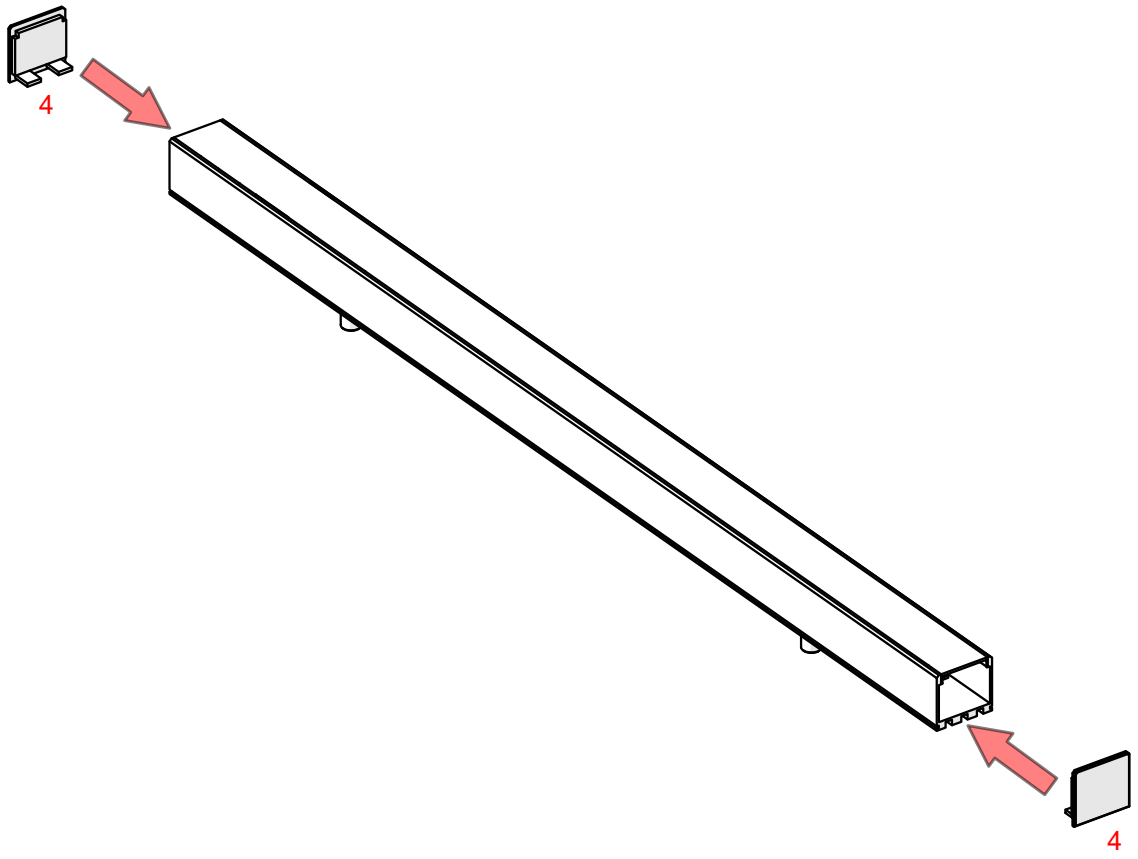

X

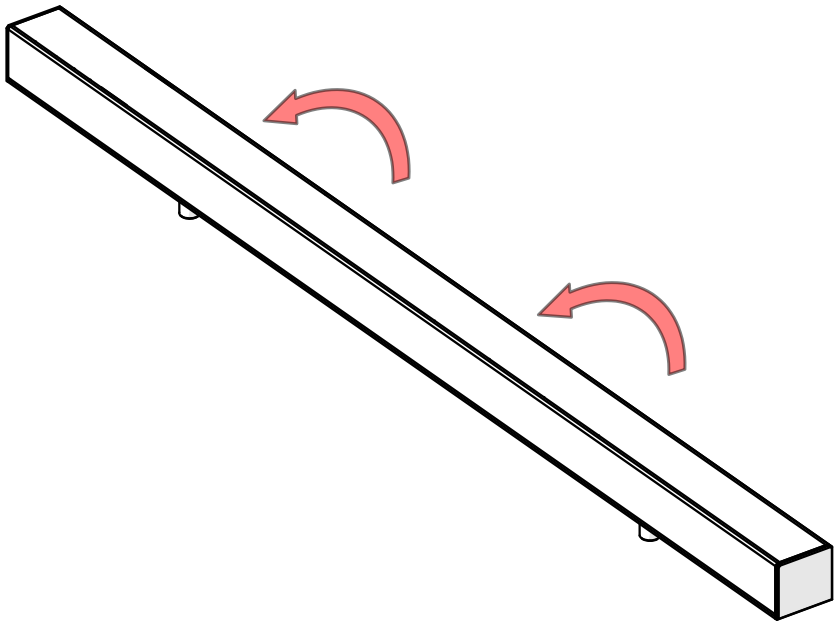

XI

