Profile DES
Ref. A18030

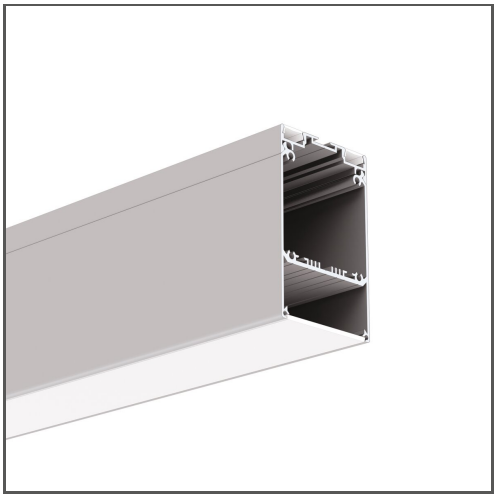

KEY FEATURES

- Up/down lighting
- Compartment for driver and electrical components
- Easy maintenance
- Wide range of accessories
- Possiblity to obtain UGR < 19

APPLICATION

main and decorative lighting

MOUNTING

suspended, using a dedicated mounting track and dedicated accessories

ADDITIONAL INFORMATION

- the power supply can be secured inside the profile using dedicated accessories
- when choosing a different length of profiles / covers than available in the standard, you should additionally choose the cutting service at KLUŚ
- NCS Premium paint option - minimum order quantity 30pcs - available on order within 14 days

Standard lengths of KLUŚ profiles and covers: 1000 mm (tolerance ± 1.5 mm) and 2005 mm / 3010 mm (tolerance + 5 mm); for selected covers: 6050 mm, 10050 mm (tolerance + 5 mm)

IP PROTECTION RATING

IP20 | IP54

MOUNTING METHOD

Suspended

TECHNICAL DRAWING

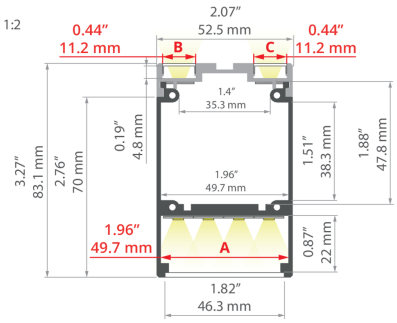

AVAILABLE COLOURS

COLOR	LENGTH	REF
silver anodized	1000 mm	A18030A_1
	2005 mm	A18030A_2
	3010 mm	A18030A_3
black anodized	1000 mm	A18030A07_1
	2005 mm	A18030A07_2
	3010 mm	A18030A07_3
caramel (NCSS3030-Y60R) lacquered	2005 mm	A18030L14OD_2
pastel blue (NCSS2010-B) lacquered		A18030L13OD_2
sand (NCSS2010-Y30R) lacquered		A18030L11OD_2
light sage (NCSS2010-G50Y) lacquered		A18030L12OD_2

TECHNICAL SPECIFICATIONS

Material	aluminum
Possible fixture IP	20, 54
Possible fixture shapes	linear, polygonal
Profile cross-section	rectangular
Width	52.5 mm
Height	83.1 mm
LED gluing width A	49.7 mm
LED gluing width B	11.2 mm
LED gluing width C	11.2 mm
Max. number of LED strips A (8 mm wide)	6
Max. number of LED strips B (8 mm wide)	1
Max. number of LED strips C (8 mm wide)	1
Width of the glow	46.55 mm
Max power of a single KLUŚ LED strip	24 W/m
Dedicated space for power supply	yes
Building type	Commercial, Retail, Entertainment/ Arts, HoReCa object
Facility zone	office
The cover is cut to the length of the profile	yes
Can be easily connected into runs	yes
Wire out back of extrusion	yes
Two directional lighting for suspended fixtures	yes

Profile DES
Ref. A18030

RELATED ACCESSORIES > COVERS

NAME	KEY FEATURES	MATERIAL	MATERIAL TRANSMITTANCE	COLOR	REF.
Cover KA-11	- maximum brightness - indoor use - basic - universal	PC	67 %	frosted	B17064F
			89 %	clear	B17064C
Cover DHS		PC	68 %	frosted	B17052M
			94 %	clear	B17052T
Cover HS-11	- For indoor and outdoor applications - UV resistant - hight durability	PC	59 %	frosted	B17208F
			88 %	clear	B17208C
Cover KA-T-11	- maximum brightness - indoor use - economic - universal for basic applications	PVC	54 %	frosted	B17179F
			86 %	clear	B17179C

RELATED ACCESSORIES > END CAPS

NAME	MATERIAL	COLOR	REF.
End cap DES 	stainless steel	silver	C28209A01

RELATED ACCESSORIES > OTHER RELATED ACCESSORIES > CANOPIES

NAME	KEY FEATURES	MATERIAL	COLOR	REF.
Canopy Fi-60mm	- Convenient cable length adjustment, in the ZM system	steel	gray lacquered	C24540L01
			white lacquered	C24540L10
			black lacquered	C24540L07
Canopy BOX-M70		aluminum	silver anodized	C24541A
			white lacquered	C24541L10
			black anodized	C24541A07

RELATED ACCESSORIES > OTHER RELATED ACCESSORIES > FASTENERS AND HEADS FOR PROFILES

NAME	MATERIAL	COLOR	REF.
Fastener UCHO-ZD, silver	aluminum	silver anodized	C28193N00

RELATED ACCESSORIES > OTHER RELATED ACCESSORIES > CONDUCTIVE FASTENERS AND HEADS FOR PROFILES

NAME	MATERIAL	COLOR	REF.
Head BZP-ZO	stainless steel	silver	42214
Fastener PUSZ-LIN-ZD, silver	stainless steel	silver	42257
Fastener PUSZ-LIN-ZD	stainless steel, brass, nylon	silver	C28164N00
	aluminum, brass, nylon	white lacquered	C28164L10
	aluminum, brass, nylon	black lacquered	C28164L07

RELATED ACCESSORIES > OTHER RELATED ACCESSORIES > CONNECTORS

NAME	MATERIAL	COLOR	REF.
Connector ZM-NA	stainless steel	silver	42305 42339 42725 C28242N00
Connector ZD	stainless steel	silver	43501 43502 43503
Connector ZD-PION	stainless steel	silver	C28244N00 C28245N00

RELATED ACCESSORIES > OTHER RELATED ACCESSORIES > SUSPENSION AND MOUNTING SETS

NAME	KEY FEATURES	MATERIAL	COLOR	REF.
Fastener set RG-1	- Cable adjustment at the ceiling, cable included	brass	silver glossy	C28230P00
			silver satin	C28230P01
			white colored	C28230L10
			black colored	C28230L07
Fastener set PUSZ-ZD-1		aluminum	black lacquered	C24775L07
		aluminum	white lacquered	C24775L10
		stainless steel	colorless colored	C24775N00

Profile DES
Ref. A18030

NAME	KEY FEATURES	MATERIAL	COLOR	REF.
Fastener set PUSZ-ZD-2		aluminum aluminum stainless steel	black lacquered white lacquered colorless colored	C24776L07 C24776L10 C24776N00

RELATED ACCESSORIES > OTHER RELATED ACCESSORIES > SECURITY AND BLOCKS

NAME	KEY FEATURES	MATERIAL	COLOR	REF.
Block ZD, gray	- Accessory locking in the ZD system	stainless steel	gray	C28195N00
Block ZM, gray	- Accessory locking in the ZM system	silicon	gray	C28194N00

RELATED ACCESSORIES > RELATED LED > HIGH EFFICACY

NAME	KEY FEATURES	IP PROTECTION RATING	POWER CONSUMPTION	REF.
LED tape K-VHE-0480-24	- universal for basic applications - high efficacy - High Efficacy	20	4.8 W/m	K-VHE27-0480-24 K-VHE30-0480-24 K-VHE40-0480-24
LED tape K-VHE-0960-24	- universal for basic applications - high efficacy - High Efficacy	20	9.6 W/m	K-VHE40-0960-24
LED tape K-VHE-1440-24	- universal for basic applications - high efficacy - High Efficacy	20	14.4 W/m	K-VHE27-1440-24 K-VHE30-1440-24 K-VHE40-1440-24 K-VHE50-1440-24

RELATED ACCESSORIES > RELATED LED > CRI 95+

NAME	KEY FEATURES	IP PROTECTION RATING	POWER CONSUMPTION	REF.
LED tape K-CR-0480-24	- universal for basic applications - CRI over 95	20	4.8 W/m	K-CR27-0480-24 K-CR30-0480-24 K-CR40-0480-24
LED tape K-CR-0960-24	- universal for basic applications - CRI over 95	20	9.6 W/m	K-CR40-0960-24
LED tape K-CR-1440-24	- universal for basic applications - CRI over 95	20	14.4 W/m	K-CR27-1440-24 K-CR30-1440-24 K-CR40-1440-24
LED tape KWP-CR-0480-24	- universal for basic applications - CRI over 95	65	4.8 W/m	KWP-CR27-0480-24 KWP-CR30-0480-24 KWP-CR35-0480-24 KWP-CR40-0480-24 KWP-CR50-0480-24
LED tape KWP-CR-0960-24	- universal for basic applications - CRI over 95	65	9.6 W/m	KWP-CR40-0960-24 KWP-CR50-0960-24

RELATED ACCESSORIES > RELATED LED > WHITE MONO

NAME	KEY FEATURES	IP PROTECTION RATING	POWER CONSUMPTION	REF.
LED tape K-0360-24 3.6 W/m, IP20 NEW		20	3.6 W/m	K-27-0360-24 K-30-0360-24 K-35-0360-24 K-40-0360-24 K-50-0360-24
LED tape K-HD-0430-24 4.3 W/m, IP20 NEW		20	4.3 W/m	K-HD18-0430-24 K-HD22-0430-24 K-HD27-0430-24 K-HD30-0430-24 K-HD35-0430-24 K-HD40-0430-24 K-HD50-0430-24
LED tape K-0480-24	- universal for basic applications	20	4.8 W/m	K-27-0480-24 K-30-0480-24 K-35-0480-24 K-50-0480-24
LED tape K-HD-0480-24	- high LED density - Ease of obtaining a line of light	20	4.8 W/m	K-HD27-0480-24 K-HD40-0480-24
LED tape K-0500-24 5 W/m, IP20 NEW	- Thin line of light - longitudinal bending - Flexibility for bending	20	5 W/m	K-30-0500-24 K-40-0500-24
LED tape K-0720-24 7.2 W/m, IP20 NEW		20	7.2 W/m	K-27-0720-24 K-30-0720-24 K-35-0720-24 K-40-0720-24 K-50-0720-24
LED tape K-HD-0830-24 8.3 W/m, IP20 NEW		20	8.3 W/m	K-HD27-0830-24 K-HD30-0830-24 K-HD35-0830-24 K-HD40-0830-24 K-HD50-0830-24
LED tape K-0960-24	- universal for basic applications	20	9.6 W/m	K-30-0960-24 K-40-0960-24 K-40-0960-24-R30
LED tape K-HD-0960-24	- high LED density - Ease of obtaining a line of light	20	9.6 W/m	K-HD40-0960-24
LED tape K-1000-24 10 W/m, IP20 NEW		20	10 W/m	K-30-1000-24 K-40-1000-24

Profile DES
Ref. A18030

NAME	KEY FEATURES	IP PROTECTION RATING	POWER CONSUMPTION	REF.
LED tape K-CB-1000-24 10 W/m, IP20 NEW		20	10 W/m	K-CB27-1000-24 K-CB30-1000-24 K-CB40-1000-24 K-CB50-1000-24
LED tape K-1080-24 10.8 W/m, IP20 NEW		20	10.8 W/m	K-27-1080-24 K-30-1080-24 K-35-1080-24 K-40-1080-24 K-50-1080-24
LED tape K-HD-1260-24 12.6 W/m, IP20 NEW		20	12.6 W/m	K-HD27-1260-24 K-HD30-1260-24 K-HD35-1260-24 K-HD40-1260-24 K-HD50-1260-24
LED tape K-1440-24	- universal for basic applications	20	14.4 W/m	K-27-1440-24 K-40-1440-24 K-40-1440-24-R30
LED tape K-HD-1440-24	- high LED density - Ease of obtaining a line of light	20	14.4 W/m	K-HD40-1440-24
LED tape K2-1440-24 14.4 W/m, IP20 NEW		20	14.4 W/m	K2-27-1440-24 K2-30-1440-24 K2-35-1440-24 K2-40-1440-24 K2-50-1440-24
LED tape K-1500-24 15 W/m, IP20 NEW		20	15 W/m	K-30-1500-24 K-35-1500-24 K-40-1500-24
LED tape K3-2160-24 21.6 W/m, IP20 NEW ON ORDER	- Three-row LED strip - quick installation	20	21.6 W/m	K3-35-2160-24
LED tape K-2300-24	- high power	20	23 W/m	K-30-2300-24 K-40-2300-24
LED tape K-2400-24	- high power	20	24 W/m	K-27-2400-24 K-30-2400-24 K-35-2400-24 K-40-2400-24 K-50-2400-24
LED tape KWP-0360-24 3.6 W/m, IP65 NEW		65	3.6 W/m	KWP-27-0360-24 KWP-30-0360-24 KWP-35-0360-24 KWP-40-0360-24 KWP-50-0360-24
LED tape KWP-GHD-0430-24 4.3 W/m, IP65 NEW		65	4.3 W/m	KWP-GHD27-0430-24 KWP-GHD30-0430-24 KWP-GHD35-0430-24 KWP-GHD40-0430-24 KWP-GHD50-0430-24
LED tape KWP-HD-0430-24 4.3 W/m, IP65 NEW		65	4.3 W/m	KWP-HD27-0430-24 KWP-HD30-0430-24 KWP-HD35-0430-24 KWP-HD40-0430-24 KWP-HD50-0430-24
LED tape KWP-0480-24	- universal for basic applications	65	4.8 W/m	KWP-27-0480-24 KWP-30-0480-24 KWP-50-0480-24
LED tape KWP-GHD-0480-24	- high LED density - Ease of obtaining a line of light	65	4.8 W/m	KWP-GHD27-0480-24
LED tape KWP-0500-24 5 W/m, IP65 NEW		65	5 W/m	KWP-30-0500-24 KWP-40-0500-24
LED tape KWP-G-0500-24 5 W/m, IP65 NEW		65	5 W/m	KWP-G30-0500-24 KWP-G40-0500-24
LED tape KWP-0720-24 7.2 W/m, IP65 NEW		65	7.2 W/m	KWP-27-0720-24 KWP-30-0720-24 KWP-35-0720-24 KWP-40-0720-24 KWP-50-0720-24
LED tape KWP-GHD-0830-24 8.3 W/m, IP65 NEW		65	8.3 W/m	KWP-GHD27-0830-24 KWP-GHD30-0830-24 KWP-GHD35-0830-24 KWP-GHD40-0830-24 KWP-GHD50-0830-24
LED tape KWP-HD-0830-24 8.3 W/m, IP65 NEW		65	8.3 W/m	KWP-HD27-0830-24 KWP-HD30-0830-24 KWP-HD35-0830-24 KWP-HD40-0830-24 KWP-HD50-0830-24
LED tape KWP-0960-24	- universal for basic applications	65	9.6 W/m	KWP-40-0960-24
LED tape KWP-1000-24 10 W/m, IP65 NEW		65	10 W/m	KWP-30-1000-24 KWP-40-1000-24
LED tape KWP-CB-1000-24 10 W/m, IP65 NEW		65	10 W/m	KWP-CB27-1000-24 KWP-CB30-1000-24 KWP-CB40-1000-24 KWP-CB50-1000-24
LED tape KWP-G-1000-24 10 W/m, IP65 NEW		65	10 W/m	KWP-G30-1000-24 KWP-G40-1000-24

Profile DES
Ref. A18030

NAME	KEY FEATURES	IP PROTECTION RATING	POWER CONSUMPTION	REF.
LED tape KWP-1080-24 10.8 W/m, IP65 NEW		65	10.8 W/m	KWP-27-1080-24 KWP-30-1080-24 KWP-35-1080-24 KWP-40-1080-24 KWP-50-1080-24
LED tape KWP-GHD-1260-24 12.6 W/m, IP65 NEW		65	12.6 W/m	KWP-GHD27-1260-24 KWP-GHD30-1260-24 KWP-GHD35-1260-24 KWP-GHD40-1260-24 KWP-GHD50-1260-24
LED tape KWP-HD-1260-24 12.6 W/m, IP65		65	12.6 W/m	KWP-HD27-1260-24 KWP-HD30-1260-24 KWP-HD35-1260-24 KWP-HD40-1260-24 KWP-HD50-1260-24
LED tape KWP-1440-24	- universal for basic applications	65	14.4 W/m	KWP-27-1440-24 KWP-40-1440-24
LED tape KWP-1500-24 15 W/m, IP65 NEW		65	15 W/m	KWP-30-1500-24 KWP-40-1500-24
LED tape KWP-G-1500-24 15 W/m, IP65 NEW		65	15 W/m	KWP-G30-1500-24 KWP-G40-1500-24

RELATED ACCESSORIES > RELATED LED > RGB / RGB-W / RGB-CCT

NAME	KEY FEATURES	IP PROTECTION RATING	POWER CONSUMPTION	REF.
LED tape K-RGB-1200-24	- RGB	20	12 W/m	K-RGB-1200-24
LED tape K-RGBW-1530-24 15.3 W/m, IP20 NEW	- RGBW - high LED density	20	15.3 W/m	K-RGB30-1530-24 K-RGB40-1530-24
LED tape KWP-RGB-1200-24	- RGB	65	12 W/m	KWP-RGB-1200-24
LED tape KWP-GRGB-1530-24 15.3 W/m, IP65 NEW	- RGBW - high LED density	65	15.3 W/m	KWP-GRGB30-1530-24 KWP-GRGB40-1530-24
LED tape KWP-RGBW-1530-24 15.3 W/m, IP65 NEW	- RGBW - high LED density	65	15.3 W/m	KWP-RGB30-1530-24 KWP-RGB40-1530-24

RELATED ACCESSORIES > RELATED LED > ADJUSTABLE WHITE / DIM TO WARM

NAME	KEY FEATURES	IP PROTECTION RATING	POWER CONSUMPTION	REF.
LED tape K-18D30-0960-24	- Dim To Warm LED Tape	20	9.6 W/m	K-18D30-0960-24
LED tape K-27T50-1440-24	- RGB+Tunable White	20	14.4 W/m	K-27T50-1440-24
LED tape KWP-18D30-0960-24	- Dim To Warm LED Tape	65	9.6 W/m	KWP-18D30-0960-24

RELATED ACCESSORIES > ELECTRONICS > SWITCHES

NAME	KEY FEATURES	IP PROTECTION RATING	REF.
Proximity switch UNI-11	- touchless switch - width 11mm	20	E61603
Proximity switch UNI-P	- touchless switch - width only 7mm - factory pre-soldered wires	20	E61580
Proximity switch UNI	- touchless switch - width only 7mm	20	E61579
Proximity switch UNI-11P	- touchless switch - width 11mm - factory pre-soldered wires	20	E61604