SINCE 1945 KEYSTONE LIGHT MADE EASY®

ESSENTIAL SERIES
GENERAL PURPOSE LED BULBS

COLOR SELECT

KT-LED15PAR38-F-8CSF

120W REPLACEMENT LAMP

c UL us LISTED | Enclosed Fixture Rated | RoHS Compliant | TRUSTED NB WARRANTY | 3 YEAR WARRANTY

DESCRIPTION

15W PAR38 Lamp | Color Select | >80 CRI | Standard Flood Distribution

- **LAMP TYPE:** PAR38
- **BASE TYPE:** E26 (Medium)
- **WATTAGE:** 15W
- **COLOR TEMPERATURE:** 2700/3000/3500/4000/5000K
- **COLOR RENDERING INDEX (CRI):** >80
- **WARRANTY:** 3 Years
- **RATED LIFE:** L70 (15,000 Hours)



TYPICAL APPLICATIONS

- Track Lighting
- Display
- Flood and Spot Lighting
- Outdoor fixtures (with suitable protection from the elements)

PRODUCT FEATURES

- Energy efficient: 80%+ savings and less heat generation vs legacy equivalents
- Long life that minimizes replacement and maintenance costs
- Durable plastic housing for lower risk of breakage
- Smooth diffused lens for comfortable, glare free performance
- ANSI compliant construction that ensure fitment in intended applications
- Suitable for wet locations
- Suitable for totally enclosed luminaires
- Forward phase dimmable to 10%
- Operating temperature range -4°F/-20°C to 113°F/45°C
- Power factor: > 0.75
- Complies with Part 15 of FCC

PERFORMANCE SPECIFICATIONS

Keystone Catalog Number	Base Type	Rated Lamp Wattage	Legacy Equivalent Wattage	Color Temp	Lumens	Efficacy	Input Voltage	CRI	Dimmable	Beam Angle
KT-LED15PAR38-F-8CSF	E26	15W	120W halogen	2700K	1080	72 lm/W	120V	>80	Yes	40°
				3000K	1080	72 lm/W				
				3500K	1080	72 lm/W				
				4000K	1080	72 lm/W				
				5000K	1080	72 lm/W				

SINCE 1945 KEYSTONE LIGHT MADE EASY®

ESSENTIAL SERIES
GENERAL PURPOSE LED BULBS

COLOR SELECT

KT-LED15PAR38-F-8CSF
120W REPLACEMENT LAMP

PHYSICAL SPECIFICATIONS

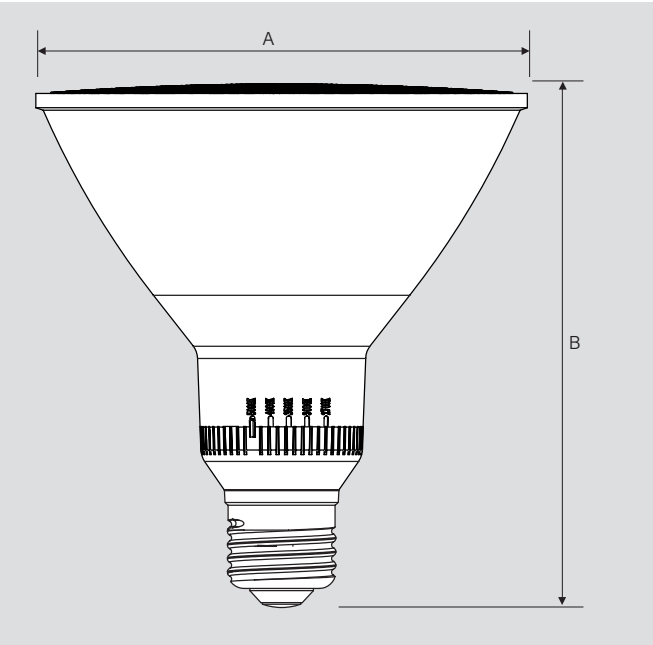

LAMP DIMENSIONS

A (Diameter)	4.65"
B (Length)	5.12"

BASE TYPE: E26 (Medium)

PACKAGING

Carton Quantity	24 pcs
Carton Dimensions	20.16" × 15.24" × 12.44"
Carton Weight	10.42 lbs

ORDERING INFORMATION

ORDER CODE	EASY CODE	UPC
KT-LED15PAR38-F-8CSF	VTG-69	843654104171

CATALOG NUMBER BREAKDOWN

KT-LED15PAR38-F-8CSF

1	2	3	4	5	6	7	8

1 Keystone Technologies
2 LED Lamp
3 Wattage
4 Lamp Shape
5 Flood
6 80 CRI
7 Color Select
8 Color Select Designation

8 Color Select Designation

F	2700/3000/3500/4000/5000K