SINCE 1945 KEYSTONE LIGHT MADE EASY®

DIRECT DRIVE LED CONNECT TO LINE VOLTAGE

KT-LED82P-O-8XX-D

2-PIN LED LAMP

DESCRIPTION

8W 2-Pin LED Omni-Directional Lamp | ≥80 CRI | Line-Voltage Compatible

TRUSTED NLB WARRANTY · CLASSIFIED cULus · RoHS Compliant · 5 YEAR WARRANTY

- **LAMP TYPE:** Compact LED
- **BULB TYPE:** 2-Pin LED
- **BASE TYPE:** G24d, G24q, GX24q
- **WATTAGE:** 8W
- **COLOR TEMPERATURE:** 2700–5000K
- **CFL EQUIVALENT:** 13W, 18W, and 26W
- **COLOR RENDERING INDEX (CRI):** ≥80
- **WARRANTY:** 5 Years



PRODUCT FEATURES

- Can be used in G24Q (4pin) and G24D (2pin) applications for ballast bypass
- Replacement for 13W/18W/26W G24d, G24q & GX24q CFL lamps
- Ideal for wall-mounted and ceiling applications
- 50,000+ hour lifetime
- Power factor: >0.9
- Environmentally friendly: No mercury used
- Die-cast aluminum heat sink
- Instant startup
- Suitable for dry and damp locations
- Frosted lens eliminates pixelation
- Approximately 50% more energy efficient than traditional CFL lamps
- Ideal for totally enclosed fixtures
- Operating temperature: −20°C/−4°F to 40°C/105°F
- Non-dimmable
- 260° beam angle
- UL damp listed

**G24q-5/6/7 and Gx24q-5/6/7 not compatible*

OPERATING SPECIFICATIONS

ELECTRICAL CHARACTERISTICS

Input Voltage	Lamp Wattage	Power Factor
120–277Vac	8W	>0.9

RATED LIFE

L70 (Hours)	50,000

PHOTOMETRIC CHARACTERISTICS

Color Temperature (CCT)	2700K	3000K	3500K	4000K	5000K
Luminous Flux	800 lm	800 lm	800 lm	800 lm	800 lm
Color Rendering Index (CRI)	≥80	≥80	≥80	≥80	≥80
Efficacy	100 lm/W	100 lm/W	100 lm/W	100 lm/W	100 lm/W
Beam Angle	260°	260°	260°	260°	260°

SPECTRAL DISTRIBUTION

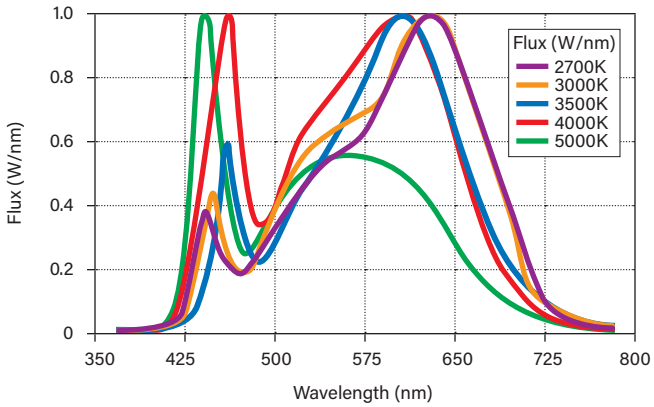

SINCE 1945 KEYSTONE LIGHT MADE EASY®

DIRECT DRIVE LED CONNECT TO LINE VOLTAGE

KT-LED82P-O-8XX-D

2-PIN LED LAMP

PHYSICAL CHARACTERISTICS

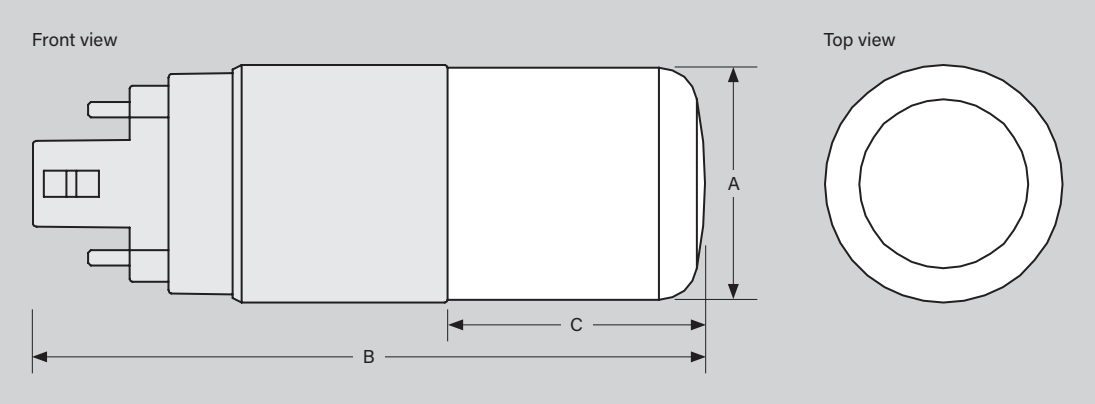

DIMENSIONS

A (Width)	1.50"
B (Length)	4.52"
C (Illuminated Length)	3.03"

WIRING INSTRUCTIONS

STEP 1
Disconnect power. Remove can cover (if applicable) and remove existing lamps from fixture.

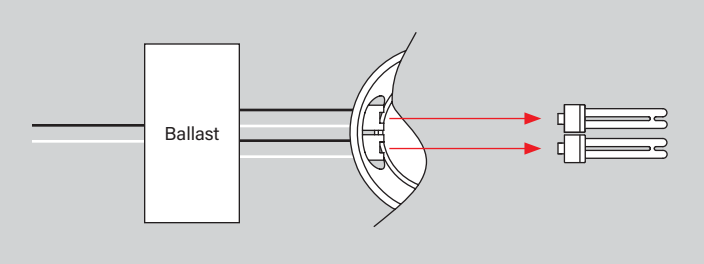

STEP 2
Cut and remove all wires connected to ballast.

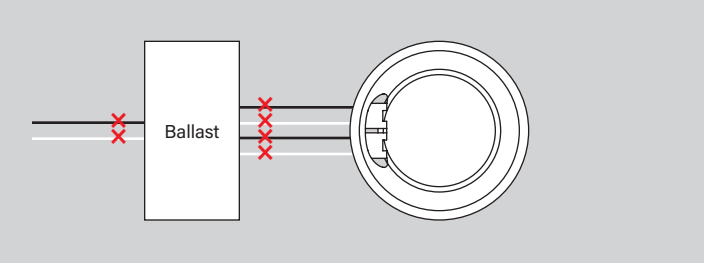

STEP 3
Connect AC input wires to lamp sockets.

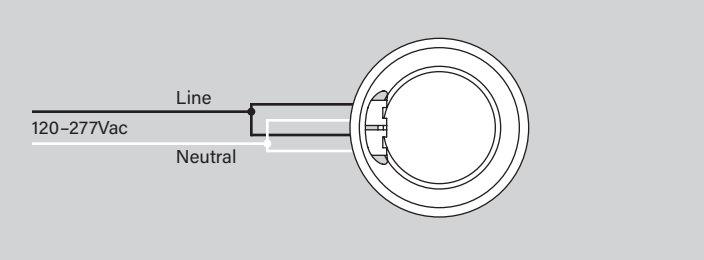

STEP 4
Install replacement G24d LED lamps into sockets. Replace can cover, ensuring that all connecting wires are covered by metal housing. Reconnect power.

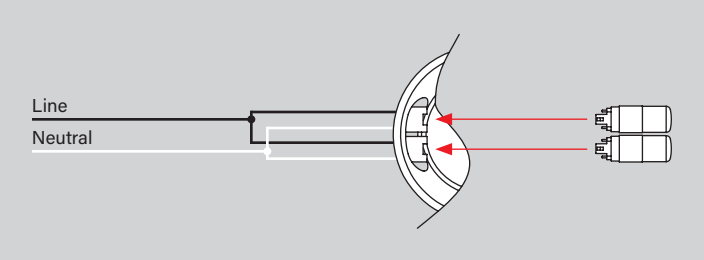

SINCE 1945 KEYSTONE LIGHT MADE EASY®

DIRECT DRIVE LED CONNECT TO LINE VOLTAGE

KT-LED82P-O-8XX-D

2-PIN LED LAMP

ORDERING INFORMATION

ORDER CODE	PACK QTY.	EASY CODE	UPC
KT-LED82P-O-827-D	50	GJI-26	843654126890
KT-LED82P-O-830-D	50	EMQ-20	843654126906
KT-LED82P-O-835-D	50	NOP-94	843654126913
KT-LED82P-O-840-D	50	KZU-89	843654126920
KT-LED82P-O-850-D	50	CRO-51	843654126937

CATALOG NUMBER BREAKDOWN

KT-LED82P-O-8XX-D

1 2 3 4 5 6 7 8

1. **Keystone Technologies**
2. **LED Lamp**
3. **Wattage**
4. **Lamp Type**
5. **Omni-Directional Orientation**
6. **800 Series**
7. **Color Temperature**
8. **Direct Drive Series**