INSTALLATION AND OPERATING INSTRUCTIONS

KT-LED82P-V-8XX-D KT-LED82P-EV-8XX-D KT-LED82P-H-8XX-D

INSTALLATION

Product includes the following components:

PARTS	QUANTITY (Distributor Pack)	QUANTITY (Carton Pack)
LED Lamp	1	50 pcs/box
Installation Instruction Sheet	1	50

CAUTION: Before installing, make certain the AC power to the fixture is off.

CAUTION: The electrical rating of this product is 120-277V. Installer must confirm that there is 120-277V at the fixture before installation.

CAUTION: LEDs are extremely bright. Do not look directly at the LED light source for extended time as over-exposure may cause harm to the eyes.

This product must be installed in accordance with the applicable installation code by a person familiar with the construction and operation of the product and the hazards involved.

To comply with the published safety standards, the following must be observed when using this LED Lamp:

LED TUBE MODEL NO.	INPUT VOLTAGE	INPUT FREQUENCY	INPUT CURRENT	INPUT WATTAGE	TUBE LENGTH
KT-LED82P-V-8XX-D	120-277V	50/60Hz	70mA	8W	93.5MM
KT-LED82P-EV-8XX-D	120-277V	50/60Hz	70mA	8W	118.5MM
KT-LED82P-H-8XX-D	120-277V	50/60Hz	70mA	8W	132MM

1. These LED Lamps are intended for lighting systems only.
2. These LED Lamps are for indoor use only. Maximum ambient temperature must not exceed 55°C (131°F).
3. These LED Lamps are not intended to be repaired by the user, manufacturer, or service personnell in any case of failure.
4. These LED Lamps are constructed such that they do not rely upon the luminaire enclosure for protection against accidental contact with live parts.
5. These LED Lamps are intended to retrofit Type IC or non–IC recessed mount listed luminaires with or without diffuser,with instructions to remove the existing trim.
6. These LED Lamps are intended to be used in dry or damp locations only.
7. Do not use with dimmers
8. This device is not intended for use with emergency exits
9. These Lamps are intended to be installed in the same orientation as the fluorescent tubes they are replacing.

WARNINGS

WARNING: Risk of fire or electric shock.The electrical rating of these products is120–277V,the installer must determine whether they have 120–277V at the luminaire before installation.

Only those open holes indicated in the photographs and/or drawings may be added or altered as a result of kit installation. Do not leave any other open holes in the wiring enclosure or electrical component enclosure during installation.

WARNING - RISK OF FIRE OR ELECTRIC SHOCK. LED RETROFIT KIT INSTALLATION REQUIRES KNOWLEDGE OF LUMINAIRES ELECTRICAL SYSTEMS. IF NOT QUALIFIED, DO NOT ATTEMPT INSTALLATION. CONTACT A QUALIFIED ELECTRICIAN.

AVERTISSEMENT - RISQUE D'INCENDIE ET DE DÉCHARGE ÉLECTRIQUE.L'INSTALLATION D'UN SYSTÈME DEL NÉCESSITE UNE CONNAISSANCE DES SYSTÈME ÉLECTRIQUES POUR LUMINAIRES. N'ENTREPRENEZ AUCUNE INSTALLATION SI VOUS N'ÊTES PAS QUALIFIÉ.CONTACTEZ UN ÉLECTRICIEN QUALIFIÉ.

WARNING - RISK OF FIRE OR ELECTRIC SHOCK. INSTALL THIS KIT ONLY IN THE LUMINAIRES THAT HAVE THE CONSTRUCTION FEATURES AND DIMENSIONS SHOWN IN THE PHOTOGRAPHS AND/OR DRAWINGS AND WHERE THE INPUT RATING OF THE RETROFIT KIT DOES NOT EXCEED THE INPUT RATING OF THE LUMINAIRE.

AVERTISSEMENT - RISQUE D'INCENDIE OU DE CHOC ÉLECTRIQUE. INSTALLER CE KIT SEULEMENT DANS DES LUMINAIRES QUI AYANT LES CARACTÉRISTIQUES DE CONSTRUCTION ET LES DIMENSIONS MENTIONNÉES DANS LES PHOTOGRAPHIES ET / OU LES DESSINS ET OÙLA VÉRIFICATION D'ENTRÉE DU KIT RETROFIT NE DÉPLACE PAS LA VALEUR D'ENTRÉE DU LUMINAIRE.

DO NOT MAKE OR ALTER ANY OPEN HOLES IN AN ENCLOSURE OF WIRING OR ELECTRICAL COMPONENTS DURING KIT INSTALLATION

WARNING - TO PREVENT WIRING DAMAGE OR ABRASION, DO NOT EXPOSE WIRING TO EDGES OF SHEET METAL OR OTHER SHARP OBJECTS.

AVERTISSEMENT - AFIN D'ÉVITER TOUT DOMMAGE OU ABRASION AU SYTÈME DE CÂBLES, NE PAS EXPOSER CE DERNIER À DES BORDS DE PLAQUES EN MÉTAL OU À DES OBJETS TRANCHANTS.

INSTALLERS SHOULD NOT DISCONNECT EXISTING WIRES FROM LAMP HOLDER TERMINALS TO MAKE NEW CONNECTIONS AT LAMP HOLDER TERMINALS.

INSTEAD INSTALLERS SHOULD CUT EXISTING LAMP HOLDER LEADS AWAY FROM THE LAMP HOLDER AND MAKE NEW ELECTRICAL CONNECTIONS TO LAMP HOLDER LEAD WIRES BY EMPLOYING APPLICABLE CONNECTORS.

INSTALLATION AND OPERATING INSTRUCTIONS

KT-LED82P-V-8XX-D KT-LED82P-EV-8XX-D KT-LED82P-H-8XX-D

Lamp instructions only apply to fixture with G24d and G24q lamp holders.

1. Check all the items of retrofit kit.
2. Check to confirm the LED Lamp's electrical parameters are rated to replace the luminaire being serviced.
3. Make sure the circuit breaker that supplies power to fixture is turned off.
4. Remove trim and existing lamps from recessed fixture.Drop housing from plaster frame.
5. Remove inner junction box cover and disconnect ballast from input wiring and lampholder leads.Dispose of removed ballast and lamps in accordance with government regulations in your area.
6. Connect input wiring to lampholder leads according to the appropriate wire diagram below(Figure 1,2,3,4).Place wires and connections back in wiring box and replace cover.
7. Reinstall housing and trim.
8. Install your new Keystone LED Lamps.Rotate lamps to desired position.
9. Apply relamping label on a visible location inside the fixture.
10. Turn power on at the breaker box and turn on the lights.

Figure 1. Retrofit with One Lamp (G24d Base)

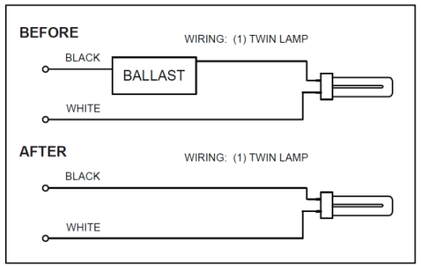

Figure 2. Retrofit with Two Lamps (G24d Base)

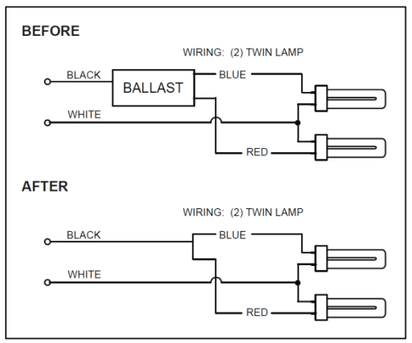

Figure 3. Retrofit with One Lamp (G24q Base)

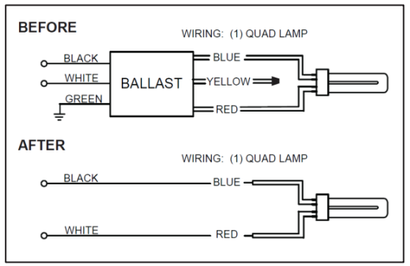

Figure 4. Retrofit with Two Lamps (G24q Base)

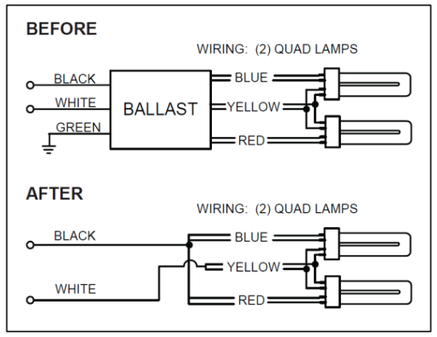

THE RETROFIT KIT IS ACCEPTED AS A COMPONENT OF A LUMINAIRE WHERE THE SUITABILITY OF THE COMBINATION SHALL BE DETERMINED BY AUTHORITIES HAVING JURISDICTION. PRODUCT MUST BE INSTALLED BY A QUALIFIED ELECTRICIAN IN ACCORDANCE WITH THE APPLICABLE AND APPROPRIATE ELECTRICAL CODES. THE INSTALLATION GUIDE DOES NOT SUPERSEDE LOCAL OR NATIONAL REGULATIONS FOR ELECTRICAL INSTALLATIONS.

LUMINAIRE LORSQUE LA PERTINENCE DE LA COMBINAISON DOIT êTRE DéTERMINéE PAR LES AUTORITéS COMPéTENTES. CE PRODUIT DOIT êTRE MIS EN PLACE PAR UN éLECTRICIEN QUALIFIé CONFORMéMENT AUX CODES éLECTRIQUES APPROPRIéS APPLICABLES. LE GUIDE D'INSTALLATION NE SUPPLANTE PAS LES RèGLEMENTS LOCAUX OU NATIONAUX EN MATIèRE D'INSTALLATIONS éLECTRIQUES.

Keystone Technologies • Philadelphia, PA • Phone (800) 464-2680 • www.keystonetech.com