SINCE 1945 KEYSTONE LIGHT MADE EASY

DIRECT DRIVE LED CONNECT TO LINE VOLTAGE

KT-LED62P-O-8XX-D

2-PIN LED CFL REPLACEMENT LAMP

REV1

DESCRIPTION

5W 2-Pin LED Omnidirectional Lamp | 2700–5000K | GX23 Base | Type B Line Voltage Compatible

c UL us LISTED | CLASSIFIED c UL us | RoHS Compliant | TRUSTED NLB WARRANTY | 5 YEAR WARRANTY

LAMP TYPE: LED CFL Replacement
BULB TYPE: 2-Pin LED
BASE TYPE: GX23
WATTAGE: 5W
COLOR TEMPERATURE: 2700–5000K
COLOR RENDERING INDEX (CRI): > 80
WARRANTY: 5 Years

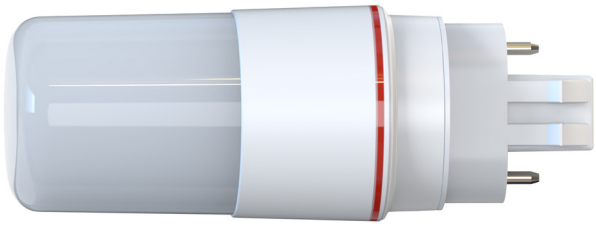

PRODUCT FEATURES

- **Replaces 13W GX23 CFL lamps**
- Approximately 50% more energy efficient vs legacy CFL lamps
- Up to 5x longer life vs traditional lamps
- Frosted diffuser that eliminates pixilation and glare
- Environmentally friendly. No mercury used
- Instant startup
- UL Classified Retrofit Kit
- Suitable for use in damp locations
- Non dimmable
- 50,000 hour lifetime
- Operating temperature: -20°C/-4°F to 45°C/113°F
- Compliant with FCC Part 15 Class B

PERFORMANCE SPECIFICATIONS

Catalog Number	Wattage	CCT	Lumens	Efficacy	Input Voltage	CRI	Base Type	Beam Angle	Related Life
KT-LED62P-O-827-D	5W	2700K	580	116 lm/W	120–277V	> 80	GX23	260°	50,000 hrs
KT-LED62P-O-830-D		3000K	610	122 lm/W					
KT-LED62P-O-835-D		3500K	630	126 lm/W					
KT-LED62P-O-840-D		4000K	650	130 lm/W					
KT-LED62P-O-850-D		5000K	650	130 lm/W					

SINCE 1945 KEYSTONE LIGHT MADE EASY

DIRECT DRIVE LED CONNECT TO LINE VOLTAGE

KT-LED62P-O-8XX-D

2-PIN LED CFL REPLACEMENT LAMP

REV1

PHYSICAL SPECIFICATIONS

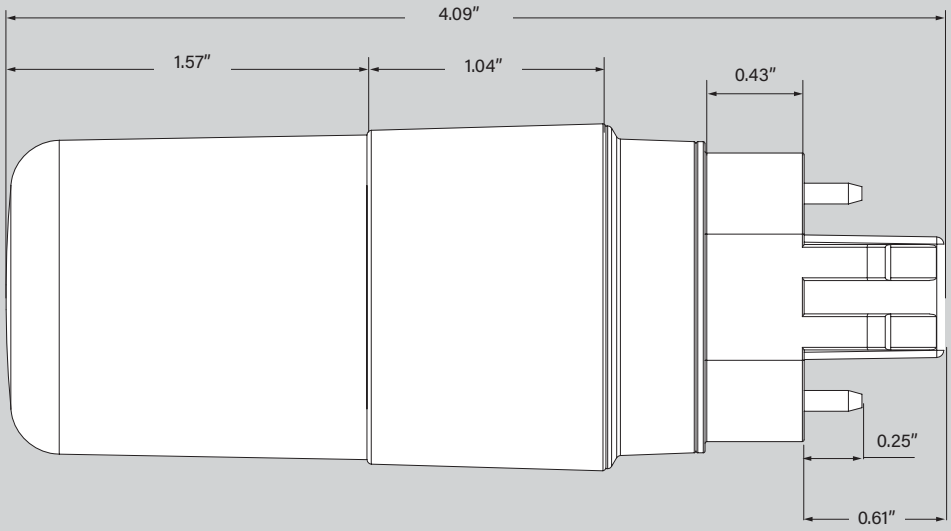

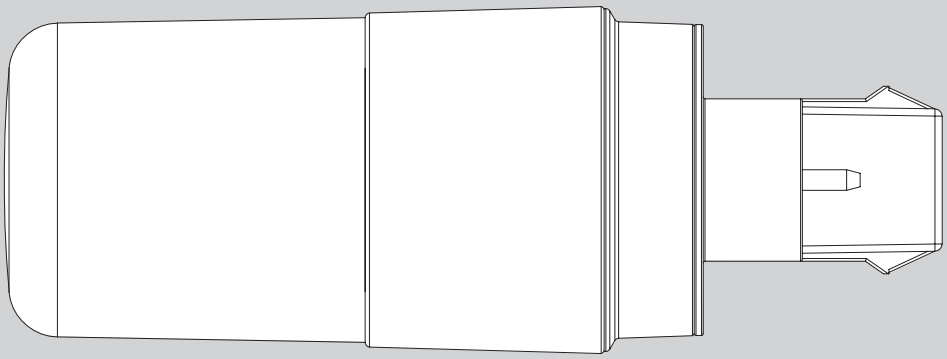

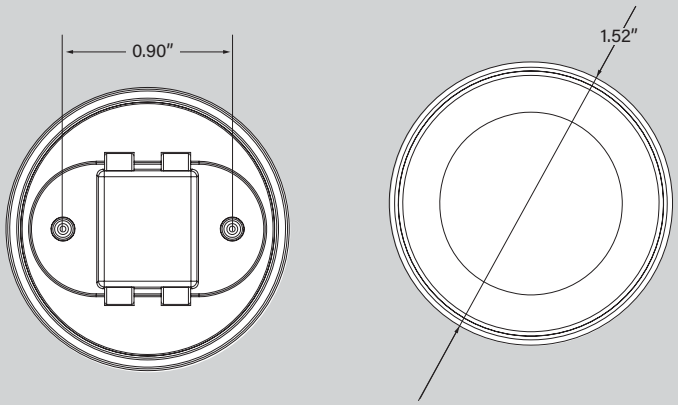

SINCE 1945 KEYSTONE LIGHT MADE EASY

DIRECT DRIVE LED CONNECT TO LINE VOLTAGE

KT-LED62P-O-8XX-D

2-PIN LED CFL REPLACEMENT LAMP

REV1

WIRING DIAGRAMS

BYPASS MAGNETIC BALLAST WITH 1 LAMP (GX23 SOCKET)

BEFORE



AFTER

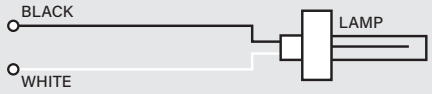

BYPASS MAGNETIC BALLAST WITH 2 LAMPS (GX23 SOCKET)

BEFORE



AFTER

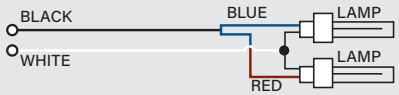

ORDERING INFORMATION

ORDER CODE	UPC	EASY CODE
KT-LED62P-O-827-D	843654126944	JUB-44
KT-LED62P-O-830-D	843654126951	HGN-74
KT-LED62P-O-835-D	843654126968	WLK-19
KT-LED62P-O-840-D	843654126975	BYX-38
KT-LED62P-O-850-D	843654126982	HXE-05

CATALOG NUMBER BREAKDOWN

KT-LED62P-O-8XX-D

1 2 3 4 5 6 7 8

1 **Keystone Technologies**
2 **LED Lamp**
3 **Wattage**
4 **Lamp Type**
5 **Omnidirectional Orientation**
6 **80 CRI**
7 **CCT**
8 **Direct Drive Series**