SINCE 1945
KEYSTONE
LIGHT MADE EASY

ESSENTIAL SERIES
GENERAL PURPOSE LED BULBS

KT-LED11.5BR40-8XX /G3
75W REPLACEMENT LAMP

DESCRIPTION
11.5W BR40 Lamp | 2700–5000K | > 80 CRI | Standard Flood

c UL us LISTED · RoHS Compliant · TRUSTED NB WARRANTY · 3 YEAR WARRANTY

- **LAMP TYPE:** BR40
- **BASE TYPE:** E12 (Medium)
- **WATTAGE:** 11.5W
- **COLOR TEMPERATURE:** 2700–5000K
- **COLOR RENDERING INDEX (CRI):** > 80
- **WARRANTY:** 3 Years
- **RATED LIFE:** 25,000 Hours



TYPICAL APPLICATIONS
- Recessed downlights
- Track lighting
- Surface-mount ceiling fixtures

PRODUCT FEATURES
- Energy efficient, 80%+ energy savings over legacy equivalents
- Lower heat generation than legacy equivalents
- ANSI compliant construction ensures fitment for intended applications
- Durable plastic housing for lower risk of breakage
- Smooth diffused lens for comfortable, glare free-performance
- Long life minimizes replacement and maintenance costs
- Smooth, uniform dimming to 5%
- Suitable for dry and damp locations
- Suitable for use in enclosed fixtures
- PF > 0.7
- UL 1993 Listed, meets CSA C22.2 No. 1993 standards
- Operating temperature range: 4ºF/–20ºC to 95ºF/35ºC
- Complies with FCC Part 15

PERFORMANCE SPECIFICATIONS

Keystone Catalog Number	Rated Lamp Wattage	Legacy Equivalent Wattage	Color Temp	Lumens	Efficacy	Input Voltage	CRI	Base Type	Dimmable	Beam Angle
KT-LED11.5BR40-827 /G3	12W	75W halogen	2700K	940	82 lm/W	120V	≥80	E26	Yes	110º
KT-LED11.5BR40-830 /G3	12W	75W halogen	3000K	940	82 lm/W	120V	≥80	E26	Yes	110º
KT-LED11.5BR40-840 /G3	12W	75W halogen	4000K	940	82 lm/W	120V	≥80	E26	Yes	110º
KT-LED11.5BR40-850 /G3	12W	75W halogen	5000K	940	82 lm/W	120V	≥80	E26	Yes	110º

KEYSTONE SINCE 1945 LIGHT MADE EASY

ESSENTIAL SERIES
GENERAL PURPOSE LED BULBS

KT-LED11.5BR40-8XX /G3
75W REPLACEMENT LAMP

PHYSICAL SPECIFICATIONS

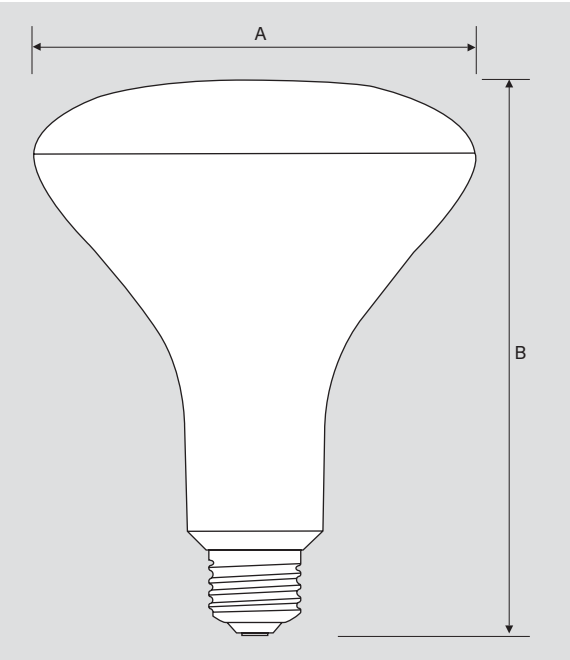

LAMP DIMENSIONS

A (Diameter)	4.72"
B (Length)	6.28"

BASE TYPE: E26 (Medium)

PACKAGING

Carton Quantity	24 pcs
Carton Dimensions	7.91" × 22.68" × 14.72"
Carton Weight	17.79 lbs

ORDERING INFORMATION

Order Code	UPC	Easy Code
KT-LED11.5BR40-827 /G3	843654150697	XJV-13
KT-LED11.5BR40-830 /G3	843654150703	FKF-53
KT-LED11.5BR40-840 /G3	843654150710	JAO-11
KT-LED11.5BR40-850 /G3	843654150727	LGC-17

CATALOG NUMBER BREAKDOWN

KT-LED11.5BR40-8XX /G3

1 2 3 4 5 6 7

1 **Keystone Technologies**
2 **LED Lamp**
3 **Wattage**
4 **Lamp Shape**
5 **80 CRI**
6 **CCT**
7 **Third Generation**