SINCE 1945 KEYSTONE LIGHT MADE EASY®

EXTERNAL DRIVE LED
TYPE C LED TUBES

KT-LED13.5T8-48G-8XX-E /G2
T8 LED LAMP

DESCRIPTION

13.5W T8 LED Tube | Type C | 3500K–5000K | >83 CRI | 0–10V Dimming

Low Optical Flicker Less Than 2% Up to 400 Hz · CLASSIFIED c UL us · DLC LISTED · RoHS Compliant · 10 YEAR LIMITED WARRANTY

- **LAMP TYPE:** Linear
- **BULB TYPE:** T8 LED
- **BASE TYPE:** G13 (Medium Bi-Pin)
- **DIMMING TYPE:** 0–10V
- **WATTAGE:** 13.5W
- **LAMP INPUT VOLTAGE:** 36–45Vdc
- **COLOR TEMPERATURE:** 3500K–5000K
- **COLOR RENDERING INDEX (CRI):** >83



PRODUCT FEATURES

- Compatible with Keystone external drive LED drivers
- Replacement for conventional fluorescent lamps
- 70,000+ hour lifetime
- Type C application for custom installations and maximum efficiency
- Environmentally friendly: No mercury used
- Low Optical Flicker
- Instant startup
- Frosted glass eliminates pixelation
- UL Classified
- Operating temperature: –20ºC/–4ºF to 45ºC/113ºF
- 130+ lumens per watt
- DLC Listed

OPERATING SPECIFICATIONS

		KTLD-2LT8-UV-13.5C-VDIM /G2						KTLD-4LT8-UV-13.5C-VDIM /G2						
		1 Lamp			2 Lamps			3 Lamps			4 Lamps			
Catalog Number	Color Temp.	Nominal Input Power	Nominal Lumens	Nominal Efficacy	Nominal Input Power	Nominal Lumens	Nominal Efficacy	Nominal Input Power	Nominal Lumens	Nominal Efficacy	Nominal Input Power	Nominal Lumens	Nominal Efficacy	Power Factor
KT-LED13.5T8-48G-835-E /G2	3500K	15W	2,100	140 lm/W	30W	4,200	140 lm/W	45W	6,300	140 lm/W	60W	8,400	140 lm/W	>0.9
KT-LED13.5T8-48G-840-E /G2	4000K	15W	2,200	147 lm/W	30W	4,400	147 lm/W	45W	6,600	147 lm/W	60W	8,800	147 lm/W	>0.9
KT-LED13.5T8-48G-850-E /G2	5000K	15W	2,200	147 lm/W	30W	4,400	147 lm/W	45W	6,600	147 lm/W	60W	8,800	147 lm/W	>0.9

SPECTRAL DISTRIBUTION

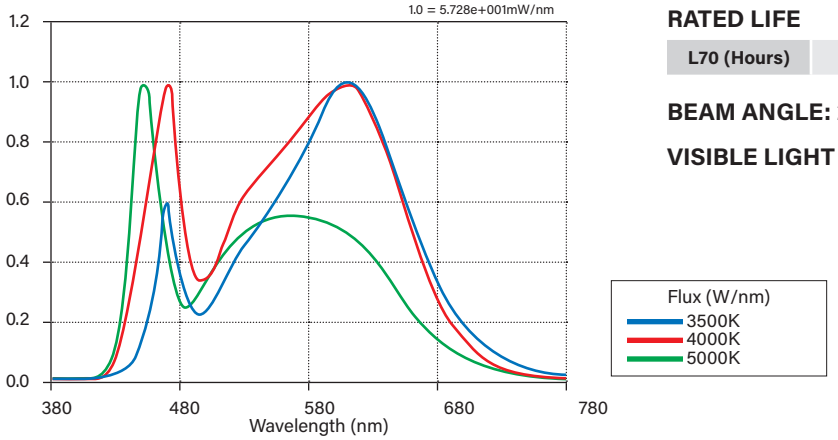

RATED LIFE

L70 (Hours)	70,000

BEAM ANGLE: 240º

VISIBLE LIGHT AREA: 325º

SINCE 1945 KEYSTONE LIGHT MADE EASY®

EXTERNAL DRIVE LED
TYPE C LED TUBES

KT-LED13.5T8-48G-8XX-E /G2
T8 LED LAMP

PHYSICAL CHARACTERISTICS

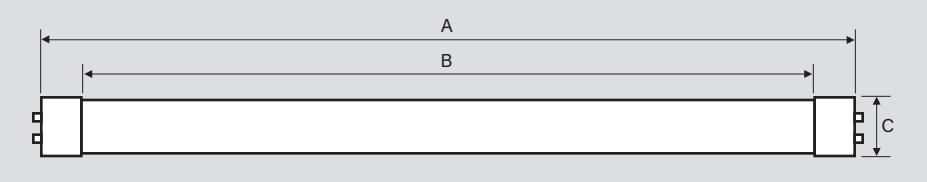

LAMP DIMENSIONS

A (Body Length)	47.19"
B (Illuminated Length)	46.19"
C (Diameter)	1.00"

NOMINAL LENGTH: 48"
BASE TYPE: G13 (Medium Bi-Pin)

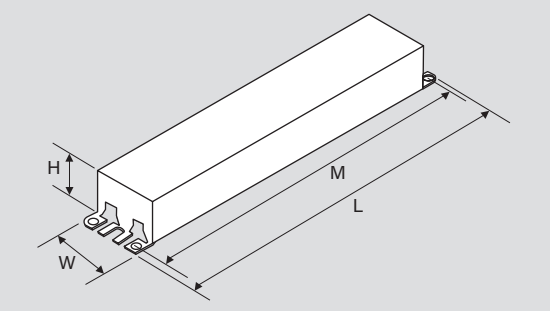

DRIVER DIMENSIONS

KTLD-2LT8-UV-13.5C-VDIM /G2		KTLD-4LT8-UV-13.5C-VDIM /G2	
Length (L)	9.50"	Length (L)	9.60"
Width (W)	1.30"	Width (W)	1.80"
Height (H)	1.10"	Height (H)	1.30"
Mounting (M)	8.90"	Mounting (M)	8.90"

WIRING DIAGRAMS

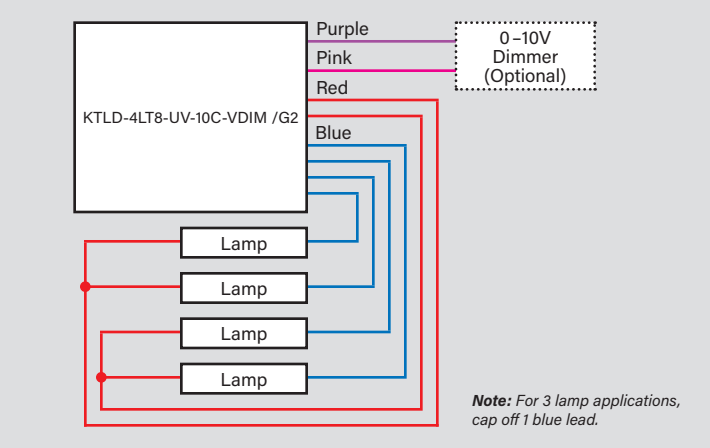

***Note:** For 3 lamp applications, cap off 1 blue lead.*

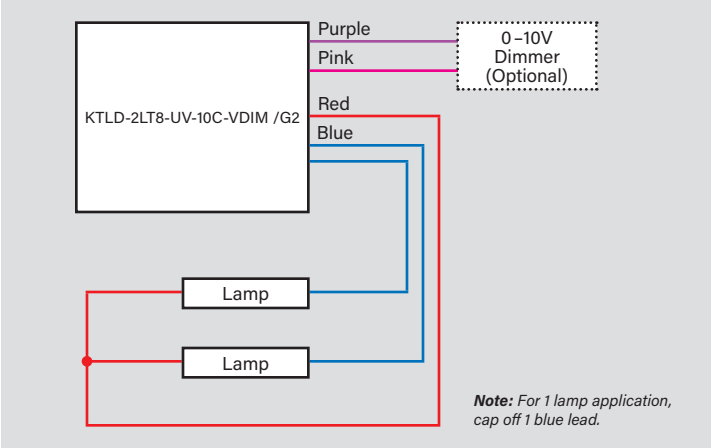

***Note:** For 1 lamp application, cap off 1 blue lead.*

SINCE 1945
KEYSTONE
LIGHT MADE EASY®

EXTERNAL DRIVE LED
TYPE C LED TUBES

KT-LED13.5T8-48G-8XX-E /G2

T8 LED LAMP

ORDERING INFORMATION

Order Code	Pack Qty.	UPC	Easy Code
KT-LED13.5T8-48G-835-E /G2	25	843654140988	AMK-44
KT-LED13.5T8-48G-840-E /G2	25	843654140995	LSL-01
KT-LED13.5T8-48G-850-E /G2	25	843654141008	RYE-65

CATALOG NUMBER BREAKDOWN

KT-LED13.5T8-48G-8XX-E /G2

1	2	3	4	5	6	7	8	9	10

1 **Keystone Technologies**
2 **LED Lamp**
3 **Wattage**
4 **Lamp Type**
5 **Normal Length (Inches)**
6 **Material**
7 **80 CRI**
8 **Color Temp**
9 **External Drive Series**
10 **Generation 2**