SINCE 1945 KEYSTONE | DIRECTDRIVE LED LINE VOLTAGE T8 TUBES

KT-LED54T8-96P-865-D /G2

T8 LED LAMP

DESCRIPTION

54W T8 LED | 6500K | >80 CRI | High Efficiency | 8 Foot

RoHS Compliant | 10 YEAR LIMITED WARRANTY

LAMP TYPE: Linear
BULB TYPE: T8 LED
BASE TYPE: R17d (Double Recessed Contact)
WATTAGE: 54W
COLOR TEMPERATURE: 6500K
COLOR RENDERING INDEX (CRI): >80
WARRANTY: 5 Years



PRODUCT FEATURES

- Replacement for Conventional T8/T12HO 8 Foot **Double Recessed Contact** Fluorescent Lamp
- Double Ended Line Voltage Wiring: Connect power to each end for simplified installation
- 50,000+ Hour Lifetime
- Approximately 50% More Energy Efficient then Standard F96T12HO Lamps
- Environmentally Friendly: No Mercury Used
- Instant Startup
- Includes 2 C-clips to be installed with the lamps into the fixture ballast cover to prevent any potential un-desired lamp twisting or sagging
- Frosted Lens Eliminates Pixelation
- UL Classified
- Operating Temperature: -20ºC/-4ºF to 55ºC/131ºF
- Integral Driver, Eliminates the Need for External Driver or Ballast
- 100+ Lumens per Watt
- Dry & Damp Location Rated
- Plastic Lens with Aluminum Backing
- Rotating End Cap Ensures Lamp can be installed properly in existing fixtures, regardless of socket orientation
- Not for use in sealed / vapor tight fixtures

OPERATING SPECIFICATIONS

ELECTRICAL CHARACTERISTICS

Input Voltage	Power Consumption	Power Factor	Input Current
120-277Vac	54W	>0.9	0.50A @ 120V 0.21A @ 277V

RATED LIFE

L70 (Hours)	50,000

PHOTOMETRIC CHARACTERISTICS

Color Temperature (CCT)	6500K
Luminous Flux	5900 lm
Color Rendering Index (CRI)	>80
Efficacy	110 lm/W
Beam Angle	120º

POLAR CANDELA DISTRIBUTION

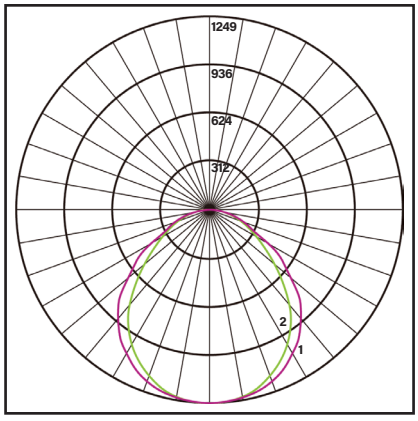

Located at Horizontal Angle = 0, Vertical Angle 0

1.Violet Vertical Plane through Horizontal Angles (90-270)

2. Green Vertical Plane through Horizontal Angles (0-180)

SINCE 1945 KEYSTONE | DIRECTDRIVE LED LINE VOLTAGE T8 TUBES

KT-LED54T8-96P-865-D /G2

T8 LED LAMP

WIRING DIAGRAMS

Double Ended Line Voltage Wiring



For Retrofit Applications (see below notes)

1. Identify ballast configuration as shown below and cut all wires connected to the ballast accordingly.

Typical Ballast Configurations:

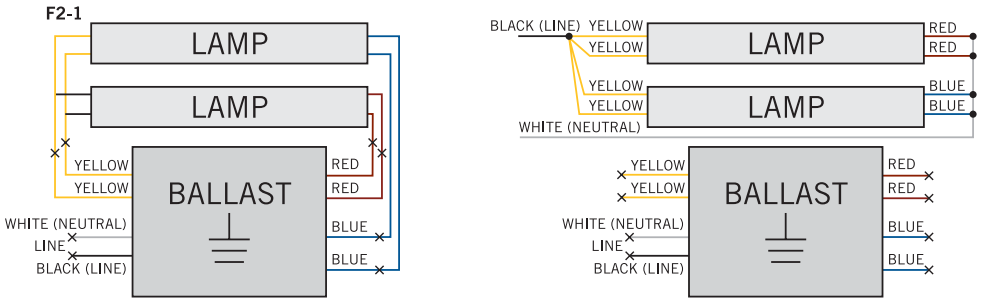

2. Confirm that the lampholders in the fixture are R17d Double Recessed Contact lampholders. These DirectDrive LED tubes require R17d Double Recessed Contact lampholders.

3. Rewire the fixture using existing lampholders as shown above according to the original ballast wiring configuration.

PHYSICAL SPECIFICATIONS

LAMP DIMENSIONS



A (Illuminated Length)	91.5″
B (Body Length)	93.31″
C (Cross Section: Width x Height)	1.08″ x 1.31″

NOMINAL LENGTH: 96″ **BASE TYPE:** R17d (Double Recessed Contact)

ORDERING INFORMATION

ORDER CODE	PACKAGING STYLE	PACK QTY.	ITEM STATUS
KT-LED54T8-96P-865-D /G2-DP	Distributor Pack (Individual Cartons)	20	Quick Ship

SINCE 1945 KEYSTONE | DIRECTDRIVE LED LINE VOLTAGE T8 TUBES

KT-LED54T8-96P-865-D /G2

T8 LED LAMP

CATALOG NUMBER BREAKDOWN

KT-LED54T8-96P-865-D /G2-CP

1	2	3	4	5	6	7	8	9	10	11

1 **Keystone Technologies**
2 **LED Lamp**
3 **Wattage**
4 **Lamp Type**
5 **Nominal Length (Inches)**
6 **Plastic/Alum. Case**
7 **80 CRI**
8 **Color Temperature**
9 **Direct Drive Series**
10 **2nd Generation**
11 **Packaging Style**