KEYSTONE SINCE 1945 LIGHT MADE EASY®

DIRECTDRIVE D2 DOUBLE-ENDED LINE VOLTAGE LED TUBES

KT-LED40T8HO-96G-8XX-D2

T8 LED LAMP

DESCRIPTION

40W T8HO/T12HO LED | 4000K | >80 CRI | High Efficiency | 8 Foot

RoHS Compliant

10 YEAR LIMITED WARRANTY

LAMP TYPE: Linear
BULB TYPE: T8HO/T12HO LED
BASE TYPE: R17d (Recessed Double Contact)
WATTAGE: 40W
COLOR TEMPERATURE: 4000K
COLOR RENDERING INDEX (CRI): >80
WARRANTY: 10 Year Limited

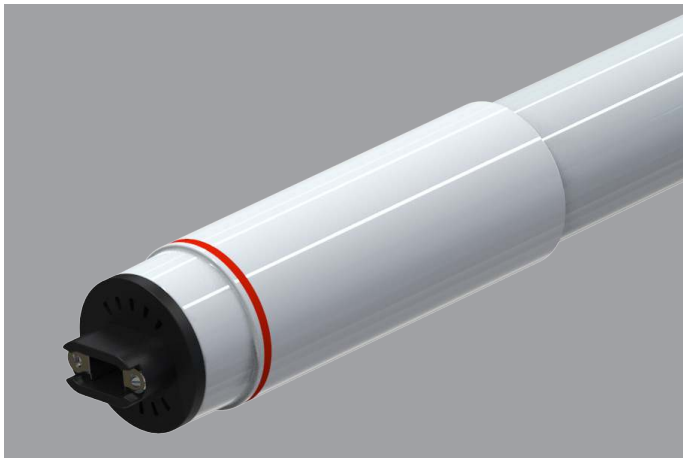

PRODUCT FEATURES

- Replacement for conventional T8/T12 8-foot, single-pin fluorescent lamp
- Double-ended line voltage wiring: Connect power to each end for simplified installation
- 50,000+ hour lifetime
- Approximately 50% more energy efficient than standard F96T12 lamps
- Environmentally friendly: No mercury used
- NSF listed: NSF/ANSI Standard 2: Food equipment, splash zone (component level—not for direct food zone without additional fixture considerations)
- Compatible with KT-EMRG-LED-12-1200-AC and KT-EMRG-LED-12-1200-AC /DF LED emergency back ups
- Includes 1 C-clips to be installed with the lamps into the fixture ballast cover to prevent any potential undesired lamp twisting or sagging
- Frosted lens elimates pixelation
- UL classified
- Operating Temperature: (–20ºC/–4ºF) (45ºC/113ºF)
- Working Humidity: 30%-85%
- Integral driver (isolated): Eliminates the need for external driver or ballast
- 130+ lumens per Watt
- Instant startup
- Not for use in sealed / vapor tight fixtures

ELECTRICAL AND PERFORMANCE SPECIFICATIONS

Catalog Number	Input Voltage	Power Consumption	Color Temperature (CCT)	Luminous Flux	Efficacy	Beam Angle	Power Factor	Input Current	Rated Life
KT-LED40T8HO-96G-840-D2	120–277 Vac	40W	4000K	5550 lm	138 lm/W	240º	>0.9	0.33 @ 120V 0.14 @ 277V	L70 (Hours) 50,000
KT-LED40T8HO-96G-850-D2			5000K	5550 lm	138 lm/W				
KT-LED40T8HO-96G-865-D2			6500K	5500 lm	138 lm/W				

KEYSTONE SINCE 1945 LIGHT MADE EASY®

DIRECTDRIVE D2 DOUBLE-ENDED LINE VOLTAGE LED TUBES

KT-LED40T8HO-96G-8XX-D2

T8 LED LAMP

SPECTRAL DISTRIBUTION

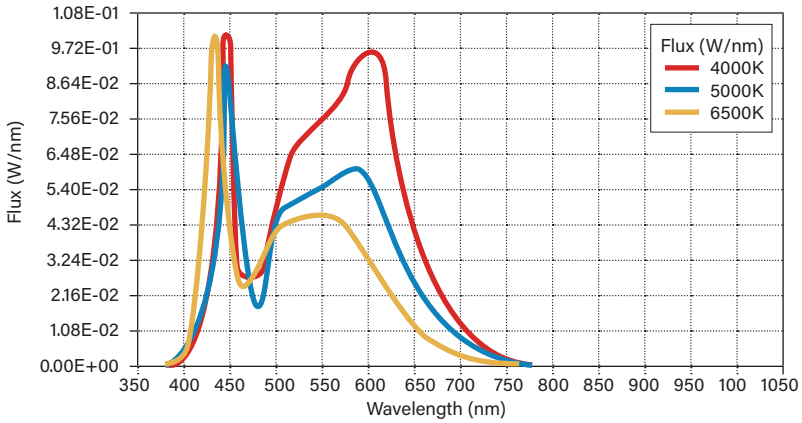

WIRING DIAGRAMS

Double Ended Line Voltage Wiring



For Retrofit Applications (see below notes)

1. Identify ballast configuration as shown below and cut all wires connected to the ballast accordingly.

Typical Ballast Configurations:

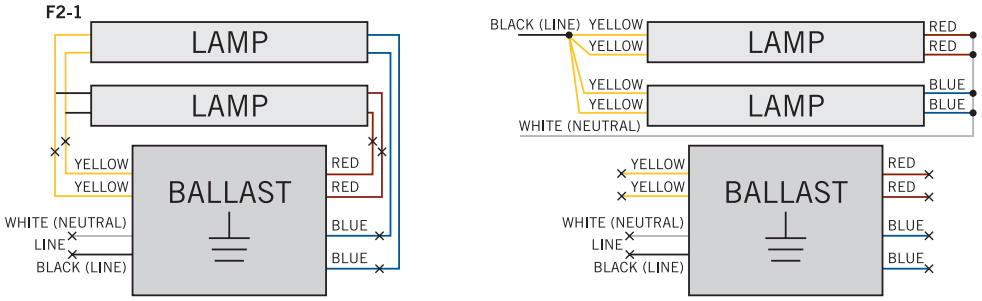

2. Confirm that the lampholders in the fixture are R17d Double Recessed Contact lampholders. These DirectDrive LED tubes require R17d Double Recessed Contact lampholders.

3. Rewire the fixture using existing lampholders as shown above according to the original ballast wiring configuration.

SINCE 1945 KEYSTONE LIGHT MADE EASY®

DIRECTDRIVE D2
DOUBLE-ENDED LINE VOLTAGE LED TUBES

KT-LED40T8HO-96G-8XX-D2

T8 LED LAMP

PHYSICAL CHARACTERISTICS

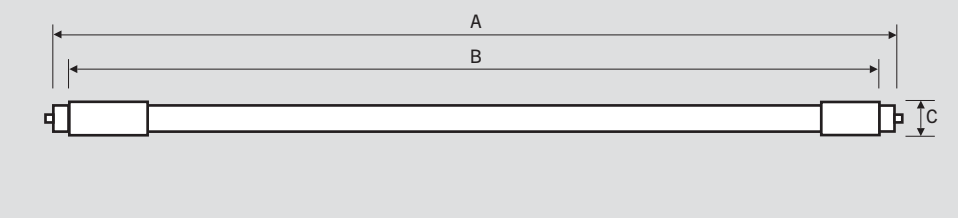

LAMP DIMENSIONS

A (Body Length)	93.31"
B (Illuminated Length)	87.41"
C End Cap Diameter	1.31"
D Dimension	1.08"

NOMINAL LENGTH: 96"

BASE TYPE: R17d (Recessed Double Contract)

ORDERING INFORMATION

ORDER CODE	PACK QTY.	UPC	EASY CODE
KT-LED40T8HO-96G-840-D2	10	843654140063	XGN-78
KT-LED40T8HO-96G-850-D2	10	843654140070	SUN-55
KT-LED40T8HO-96G-865-D2	10	843654140087	ZCZ-72

CATALOG NUMBER BREAKDOWN

KT-LED40T8HO-96G-8XX-D2

1 2 3 4 5 6 7 8 9 10

1 **Keystone Technologies**
2 **LED Lamp**
3 **Wattage**
4 **Lamp Type**
5 **High Output**
6 **Nominal Length (Inches)**
7 **Glass**
8 **80 CRI**
9 **Color Temperature**
10 **Double Drive Series**