KEYSTONE SINCE 1945 | DIRECTDRIVE LED
LINE VOLTAGE T8 TUBES

KT-LED36T8-96P-840-D
T8 LED LAMP

DESCRIPTION

36W T8 LED | 4000K | >80 CRI | High-Efficiency | 8-Foot

RoHS Compliant | 10 YEAR LIMITED WARRANTY

- **LAMP TYPE:** Linear
- **BULB TYPE:** T8 LED
- **BASE TYPE:** Fa8 (Single-Pin)
- **WATTAGE:** 36W
- **COLOR TEMPERATURE:** 4000K
- **COLOR RENDERING INDEX (CRI):** >80
- **WARRANTY:** 10 Year Limited

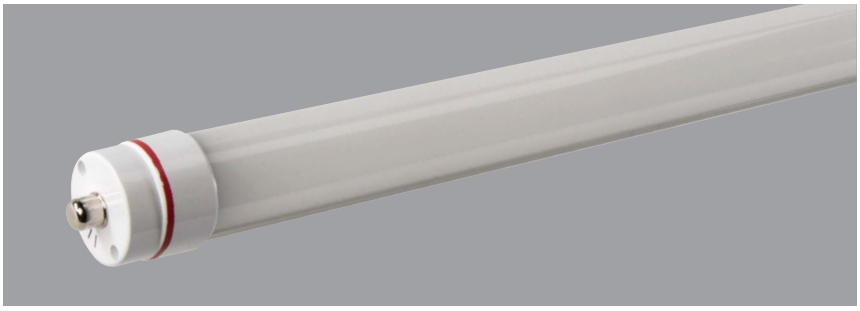

PRODUCT FEATURES

- Replacement for conventional T8/T12 8-foot single-pin fluorescent lamp
- Double-ended line voltage wiring: Connect power to each end for simplified installation
- Approximately 50% more energy efficient than standard F96T12 lamps
- Environmentally friendly: No mercury used
- Instant startup
- Includes 2 C-clips to be installed with the lamps into the fixture ballast cover to prevent any potential undesired lamp twisting or sagging
- Frosted lens elimates pixelation
- UL Classified
- Operating temperature: –20°C/–4°F to 55°C/131°F
- Integral driver (Isolated) eliminates the need for external driver or ballast
- 100+ lumens per watt
- 50,000+ hour lifetime
- Plastic lens with aluminum backing
- Not for use in sealed / vapor tight fixtures

OPERATING SPECIFICATIONS

ELECTRICAL CHARACTERISTICS

Input Voltage	Power Consumption	Power Factor	Input Current
120–277Vac	36W	>0.9	0.30A @ 120V 0.14A @ 277V

PHOTOMETRIC CHARACTERISTICS

Color Temperature (CCT)	4000K
Luminous Flux	3800 lm
Color Rendering Index (CRI)	>80
Efficacy	106 lm/W
Beam Angle	120°

RATED LIFE

L70 (Hours)	50,000

SPECTRAL DISTRIBUTION

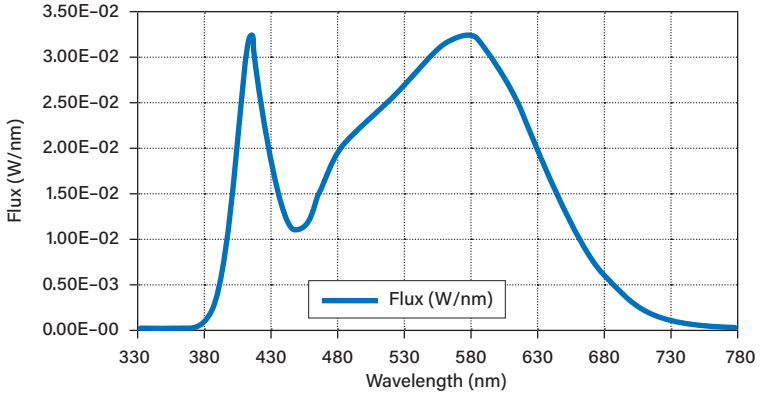

POLAR CANDELA DISTRIBUTION

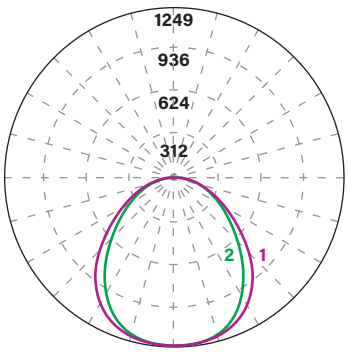

Located at:
Horizontal Angle = 0
Vertical Angle = 0

1 **Violet** Vertical Plane through Horizontal Angles (90–270)

2 **Green** Vertical Plane through Horizontal Angles (0–180)

KEYSTONE SINCE 1945 | DIRECTDRIVE LED
LINE VOLTAGE T8 TUBES

KT-LED36T8-96P-840-D
T8 LED LAMP

WIRING INSTRUCTIONS

1. Identify ballast configuration as shown below and cut all wires connected to the ballast accordingly.

Typical Ballast Configurations

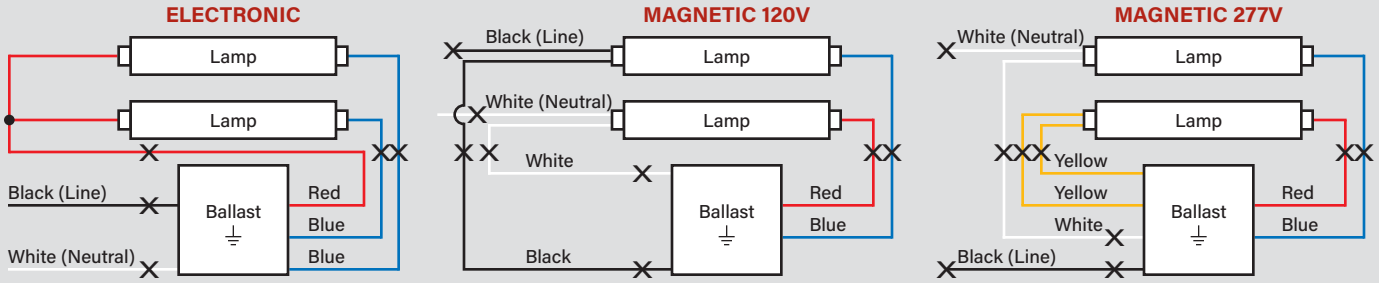

2. Confirm that the lampholders in the fixture are single-pin Fa8 lampholders. These DirectDrive LED tubes require single-pin Fa8 lampholders.

3. Rewire the fixture using existing lampholders, as shown below, according to the original ballast wiring configuration.

Typical Rewiring Configurations

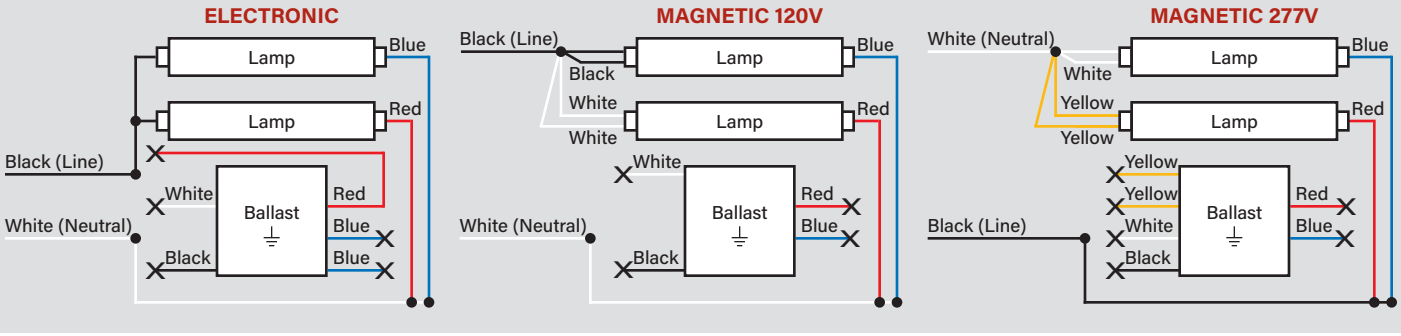

PHYSICAL CHARACTERISTICS

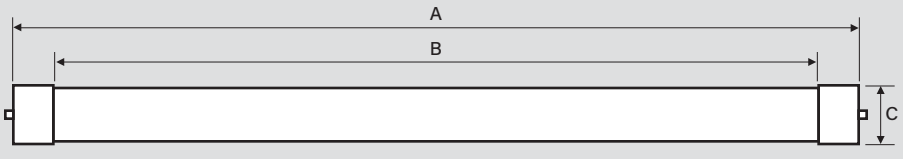

LAMP DIMENSIONS

A (Body Length)	93.31"
B (Illuminated Length)	91.50"
C (Cross-section: Width × Height)	1.08" × 1.31"

NOMINAL LENGTH: 96"
BASE TYPE: Fa8 (Single-Pin)

SINCE 1945 KEYSTONE | DIRECT DRIVE LED
LINE VOLTAGE T8 TUBES

KT-LED36T8-96P-840-D
T8 LED LAMP

ORDERING INFORMATION

ORDER CODE	PACKAGING STYLE	PACK QTY.	ITEM STATUS
KT-LED36T8-96P-840-D-DP	Distributor Pack (Individual Cartons)	20	Quick Ship

CATALOG NUMBER BREAKDOWN

KT-LED36T8-96P-840-D-DP

1 2 3 4 5 6 7 8 9 10

1. Keystone Technologies
2. LED Lamp
3. Wattage
4. Lamp Type
5. Nominal Length (Inches)
6. Plastic/Aluminum Case
7. 800 Series
8. Color Temperature
9. Direct Drive Series
10. Packaging Style