SINCE 1945
KEYSTONE

DIRECT DRIVE LED
LINE VOLTAGE T8 TUBES

INSTALLATION AND OPERATING INSTRUCTIONS

Cat. No. **KT-LED18T8-U6GC-8xx-D**

INSTALLATION

Product includes the following components:

PARTS	QUANTITY (Carton Pack)
LED Tube	12pcs/box
Installation Instruction Sheet	1
Luminaire Marking	1

CAUTION: Before installing, make certain the AC power to the fixture is off.

CAUTION: The electrical rating of this product is 120-277V. Installer must confirm that there is 120-277V at the fixture before installation.

CAUTION: LEDs are extremely bright. Do not look directly at the LED light source for extended time as over-exposure may cause harm to the eyes.

Installation Steps

Removing Existing Fluorescent System

1. Disconnect power from fixture.
2. Remove fluorescent lamp(s).
3. Remove lens and wiring compartment, if applicable.
4. Cut all wires connected to the ballast as shown below and remove ballast.

Typical Ballast Configurations

× Indicates Where to Cut Existing Wiring

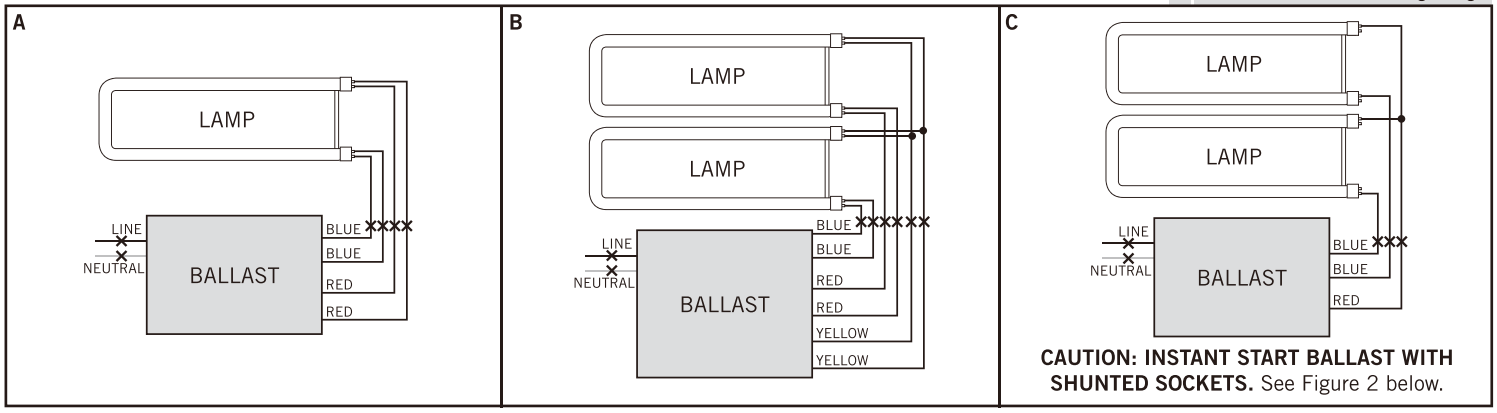

CAUTION: INSTANT START BALLAST WITH SHUNTED SOCKETS. See Figure 2 below.

5. Identify what type of lampholders are in fixture. Direct Drive LED Tubes require non-shunted G13 medium bi-pin lampholders for u-bend.

CAUTION: Use only non-shunted lampholders. Do not install product in a fixture with shunted lampholders (found in all fixtures using instant start ballasts). If the existing lampholders are shunted, remove them and replace them with non-shunted lampholders (or remove the external shunt if applicable). Make new connections directly to lampholder terminals as shown in Figure 1 below.

Typical Non-Shunted Lampholder

Figure 1

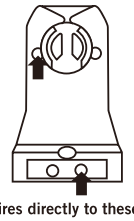

Connect wires directly to these terminals

Typical Shunted Lampholders

Figure 2

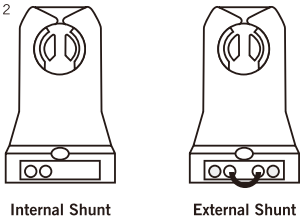

Internal Shunt External Shunt

6. If applicable, replace lampholders with non-shunted lampholders.

KT-LED18T8-U6GC-8xx-D INSTALLATION AND OPERATING INSTRUCTIONS

Tube Installation

NOTE: Only one side of this LED tube receives power. The endcap of the powered side marked with (L) for line and (N) for neutral.

1. Confirm that power is still disconnected from fixture.
2. Make sure fixture is properly grounded.
3. Follow step A for single lamp application or steps B&C for multiple lamps application, based on the number of lamps in the fixture:

Single Lamp

A. Connect line (L) and neutral (N) AC wires to the side of lampholder which corresponds to the (L) and (N) marked on the endcap. If only one lamp is being installed, proceed to step 4.

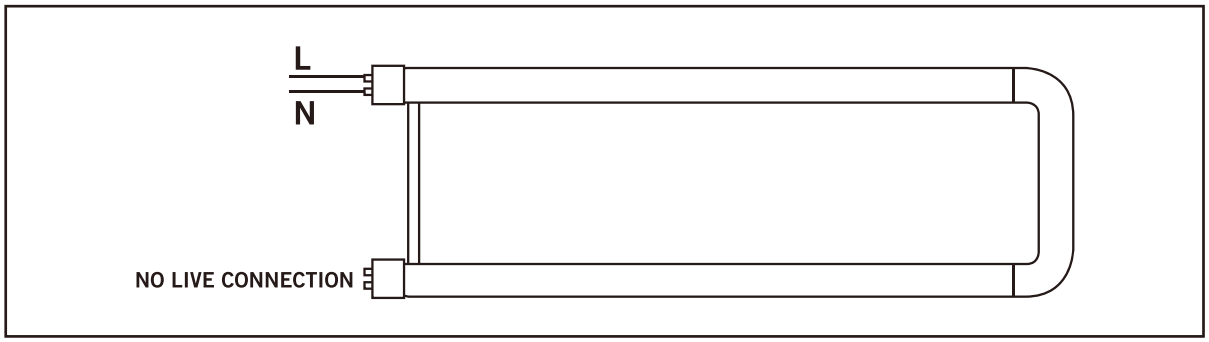

Multiple Lamps

B. Follow the steps above for single lamp connection to connect the first lamp.

C. Connect the terminals on the powered lampholder on the first lamp to the matching terminals on the powered lampholder on the second lamp with line and neutral wires as shown below. Continue daisy-chain connection for each additional lamp.

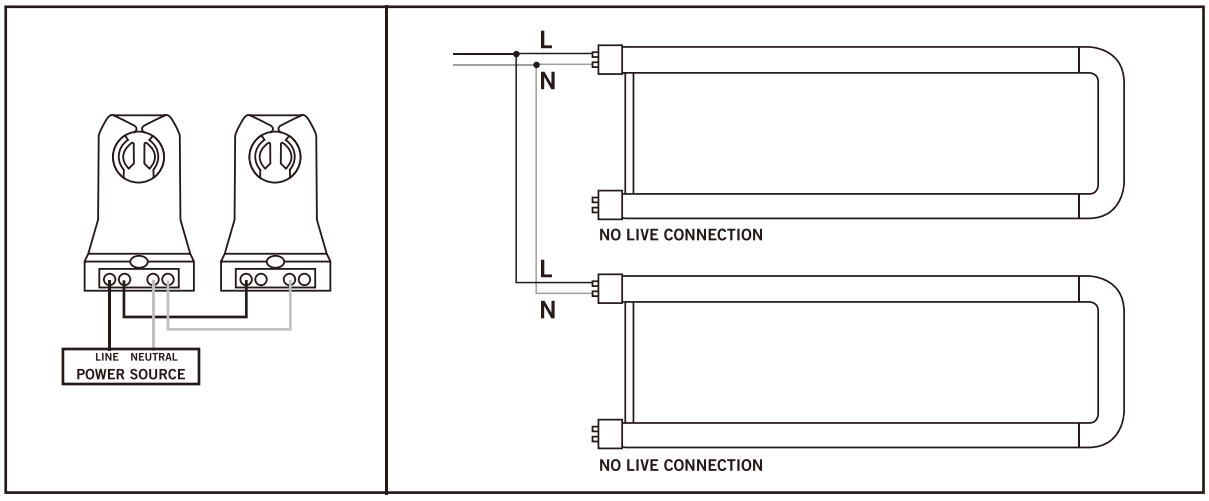

4. Complete all electrical connections with appropriate connectors/wire nuts as needed, per all local and national electrical codes.
5. Replace wiring compartment cover.
6. Install all of the Direct Drive LED tubes with the end marked for power connections installed in the lampholders wired to the line and neutral and with the LED's pointed in the proper direction for illumination. Install any lens or diffuser as applicable.
7. Apply power to fixture and check for illumination.

To comply with the published safety standards, the following must be observed when using this LED tube:

LED TUBE MODEL NO.	INPUT VOLTAGE	INPUT FREQUENCY	INPUT CURRENT	INPUT WATTAGE	TUBE LENGTH
KT-LED18T8-U6GC-8xx-D	120-277V	50/60 Hz	265mA	18W	22.25"

KT-LED18T8-U6GC-8xx-D INSTALLATION AND OPERATING INSTRUCTIONS

1. These LED tubes are intended for lighting systems only.

2. These LED tubes are for indoor use only. Maximum ambient temperature must not exceed 45°C (113ºF).

3. Avoid use in sunlight, abnormal heat, or moist / condensing environments.
- Working temperature :-20°C~45°C (-4ºF~113ºF)
- Working humidity : 30%~85%
- Storage temperature : -40°C~65°C (-40ºF~149ºF)
- Storage humidity : 10%~90%

4. These LED tubes are not intended to be repaired by the user, manufacturer, or service personnel in any case of failure.

5. These LED tubes are constructed such that they do not rely upon the luminaire enclosure for protection against accidental contact with live parts.

6. These LED tubes are intended to retrofit a maximum of two lamps in a UL Listed, surface mount, type IC or non-IC, recessed mount fluorescent luminaire with or without diffuser that use straight tubular lamps.

7. These LED tubes are intended to be used in dry or damp locations only.

8. These LED tubes are not intended for use with emergency exit fixtures of any type.

9. These tubes are intended to be installed in the same orientation as the fluorescent tubes they are replacing.

10. Only use the control provided with or specified by these instructions to control this lamp. This lamp will not operate properly when connected to a standard (incandescent) dimmer or dimming control. Only operate with specific dimmer KTD-TLED-FF1-VDIM manufactured by Keystone Technologies.

This device complies with Part 15 of the FCC Rules. Operation is subject to the following two conditions:(1)this device may not cause harmful interference, and (2)this device must accept any interference received, including interference that may cause undesired operation.

WARNINGS

WARNING: Risk of fire or electric shock. LED Retrofit Kit installation requires knowledge of luminaires electrical systems. If not qualified, do not attempt installation. Contact a qualified electrician.

AVERTISSEMENT:Risque d'incendie ou de choc électrique. Installation du kit de Retrofit LED exige une connaissance des systèmes électriques luminaires. Si vous n'êtes pas qualifié, ne tentez pas de l'installation. Contactez un électricien qualifié.

Install this kit only in the luminaires that have the construction features and dimensions shown in the photographs and/or drawings and where the input rating of the retrofit kit does not exceed the input rating of the luminaire.

Installez ce kit dans les luminaires qui ont les caractéristiques de construction et les dimensions indiquées dans les photographies et / ou dessins et où la cote d'entrée du kit de modification ne dépasse pas la capacité d'entrée du luminaire.

Do not make or alter any open holes in an enclosure of wiring or electrical components during kit installation.

Ne pas agrandir ou modifier les trous ouverts au sein du câblage ou sur les composants électriques lors de l'installation du kit.

To prevent wiring damage or abrasion, do not expose wiring to edges of sheet metal or other sharp objects.

Pour éviter d'endommager le câblage ou à l'abrasion, ne pas exposer le câblage aux bords de tôle ou d'autres objets pointus.

WARNING: To avoid potential fire or shock hazard, do not use this retrofit kit in luminaires employing shunted bi-pin lamp holders. Note: Shunted lamp holders are found only in fluorescent luminaires with Instant-Start ballasts. Instant-start ballasts can be identified by the words “Instant Start” or “1.S.” marked on the ballast. This designation may be in the form of a statement pertaining to the ballast itself, or may be combined with the marking for the lamps with which the ballast is intended to be used, for example F40T12/IS. For more information, contact the LED luminaire retrofit kit manufacturer

AVERTISSEMENT: Pour éviter tout incendie potentiel ou tout risque de choc, ne pas utiliser ce kit de rénovation dans les luminaires utilisant des douilles shuntées à deux broches.Remarque: les supports de lampe shunté ne se trouvent que sur les luminaires fluorescents avec ballasts et à allumage instantané. Les ballastes à allumage instantané peuvent être identifiés par les mots "Démarrage instantané" ou "I.S" sur la ballaste. Cette désignation peut être présentée sous la forme d'une déclaration relatives au ballast lui-même, ou peut être combinée avec le marquage pour les lampes dont le ballast est destiné à être utilisé, par exemple le modèle F40T12 / EST. Pour plus d'informations, contactez le fabricant du kit de rénovation de luminaire LED.

CONTINUED ON NEXT PAGE

WARNINGS (CONTINUED)

Installers should not disconnect existing wires from lampholder terminals to make new connections at lampholder terminals. Instead installers should cut existing lampholder leads away from the lampholder and make new electrical connections to lampholder lead wires by employing applicable connectors.

Les installateurs ne doivent pas débrancher les câbles existants de terminaux de support de lampe pour faire de nouvelles connexions dans les douilles. Au lieu installateurs doivent couper les câbles existants de terminaux de support de lampe et faire de nouvelles connexions électriques en utilisant des connecteurs applicables.

WARNING - RISK OF FIRE OR ELECTRIC SHOCK. DO NOT ALTER, RELOCATE, OR REMOVE WIRING, LAMP HOLDERS, POWER SUPPLY, OR ANY OTHER ELECTRICAL COMPONENT.

AVERTISSEMENT: RISQUES D'INCENDIE OU DE CHOC ÉLECTRIQUE.NE PAS MODIER, REPLACER OU DÉBRANCHER LES CABLES. LES DOUILLES D'ALIMENTATION, OU TOUTE AUTRE COMPOSANT ÉLECTRIQUE.

THIS RETROFIT KIT IS ACCEPTED AS A COMPONENT OF A LUMINAIRE WHERE THE SUITABILITY OF THE COMBINATION SHALL BE DETERMINED BY AUTHORITIES HAVING JURISDICTION.

CE KIT DE RETROFIT EST ACCEPTÉ COMME COMPOSANT D'UN LUMINAIRE O WH L'ADÉQUATION DE LA COMBINAISON EST DÉTERMINÉE PAR LES AUTORITÉS COMPÉTENTES.

Type B LAMP – intended for operation in luminaires with traditional fluorescent-type lampholders wired directly to the branch circuit. This includes both factory-wired luminaries as well as those converted for this purpose under a retrofit program.

The units covered by this report were intended to retrofit surface mount without diffuser, Type IC or non-IC recessed mount Listed fluorescent luminaires that use maximum two tubular lamps, the minimum lamp compartment dimensions are tabulated below:

LED TUBE MODEL NO.	MINIMUM LAMP COMPARTMENT DIMENSIONS (LxWxH)
KT-LED18T8-U6GC-8xx-D	600mm x 570mm x 75mm