SINCE 1945 KEYSTONE LIGHT MADE EASY

DIRECTDRIVE D2
DOUBLE-ENDED LINE VOLTAGE LED TUBES

KT-LED18T8HO-48G-840-D2
T8 LED LAMP

DESCRIPTION

18W LED T8 HO Lamp, 4ft long, Glass Construction | R17D Socket | 4000K 120-277V Input | Interal Driver | Direct Drive

RoHS Compliant 5 YEAR WARRANTY

- **LAMP TYPE:** Linear
- **BULB TYPE:** T8 HO Lamp
- **BASE TYPE:** R17D Socket
- **WATTAGE:** 18W
- **COLOR TEMPERATURE:** 4000K
- **COLOR RENDERING INDEX (CRI):** >82
- **WARRANTY:** 5 Years



PRODUCT FEATURES

- Replacement for conventional fluorescent lamp
- 50,000+ hour lifetime
- Approximately 40% more energy efficient than standard F32T8 lamps
- Environmentally friendly: No mercury used
- Instant startup
- Frosted lens eliminates pixelation
- Integral driver (isolated) eliminates the need for external driver or ballast
- UL classified
- Ambient Temperature: -20°C / -4°F to 45°C / 113°F
- Not for use in sealed / vapor tight fixtures

PERFORMANCE SPECIFICATIONS

Catalog Number	Input Voltage	Input Current	Wattage	Color Temperature	Lumen Output	CRI	Power Factor	Efficacy
KT-LED18T8HO-48G-840-D2	120–277V	170mA	18W	4000K	2500 lm	>82	>0.9	139 lm/W

PHOTOMETRIC CHARACTERISTICS

Color Temperature (CCT)	4000K
Luminous Flux	2500 lm
Color Rendering Index (CRI)	>80
Efficacy	139 lm/W
Beam Angle	220°
Visible Light Area	320°

MECHANICAL CHARACTERISTICS

Rated Life (L70)	50,000 hours
Wiring	Double-ended

SPECTRAL DISTRIBUTION

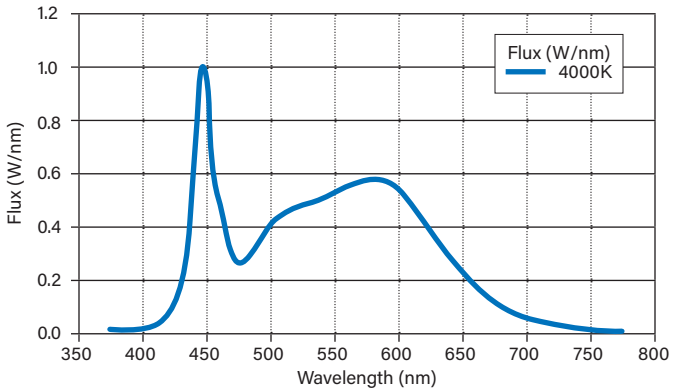

SINCE 1945 KEYSTONE LIGHT MADE EASY

DIRECTDRIVE D2
DOUBLE-ENDED LINE VOLTAGE LED TUBES

KT-LED18T8HO-48G-840-D2
T8 LED LAMP

WIRING DIAGRAMS

1. Cut all existing connections to ballast as shown below and remove ballast. See *Figure A* for typical ballast configurations.

FIGURE A **TYPICAL BALLAST CONFIGURATIONS**

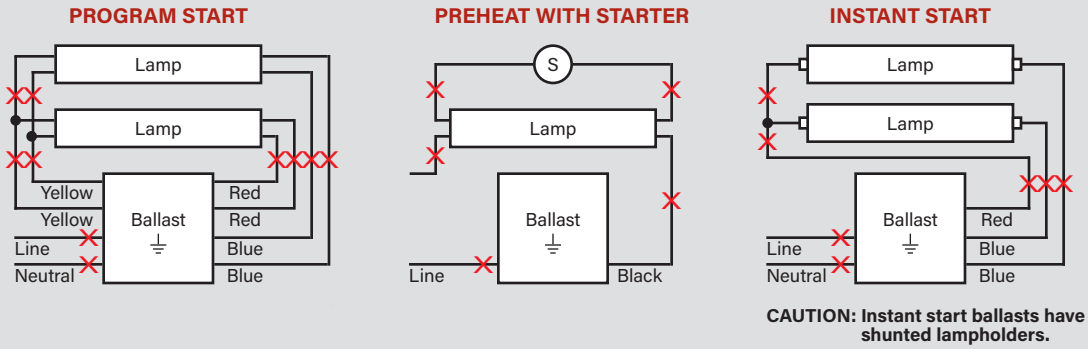

2. Re-wire fixture as shown below. For double-ended wiring, use either shunted or nonshunted lampholders.

NOTE: There should not be any exposed wires at the end of installation.

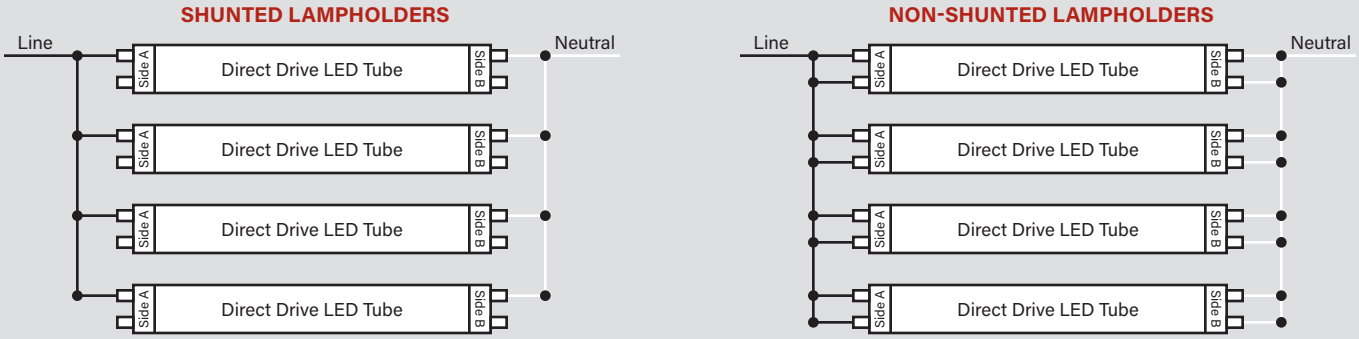

PHYSICAL CHARACTERISTICS

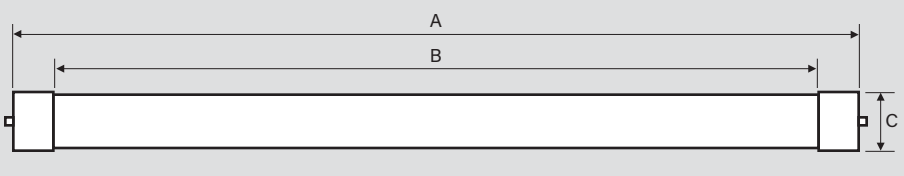

LAMP DIMENSIONS

A (Body Length)	45.91"
B (Illuminated Length)	40.40"
C (Diameter)	1.14"

NOMINAL LENGTH: 48"
BASE TYPE: R17D socket

SINCE 1945 KEYSTONE LIGHT MADE EASY

DIRECTDRIVE D2
DOUBLE-ENDED LINE VOLTAGE LED TUBES

KT-LED18T8HO-48G-840-D2
T8 LED LAMP

ORDERING INFORMATION

ORDER CODE	CARTON QUANTITY	UPC	EASY CODE
KT-LED15T8-48G-840-D2	25	843654133812	YNL-47

CATALOG NUMBER BREAKDOWN

KT-	LED	18	T8	HO-	48	G-	840-	D2
1	2	3	4		5	6	7	8	9

1 **Keystone Technologies**
2 **LED Lamp**
3 **Wattage**
4 **Lamp Type**
5 **Nominal Length (Inches)**
6 **Glass Construction**
7 **CRI**
8 **Color Temperature**
9 **Double-Ended Wiring**