SINCE 1945
KEYSTONE
LIGHT MADE EASY

DIRECTDRIVE LED
LINE VOLTAGE T8 TUBES

KT-LED12T8-48G-BL-D

T8 LED BLACK LIGHT LAMP

c UL us LISTED | RoHS Compliant | 5 YEAR WARRANTY

DESCRIPTION

12W T8 LED | High-Efficiency | Single-ended Wiring

- **LAMP TYPE:** Linear
- **BULB TYPE:** T8 LED
- **BASE TYPE:** G13 (Medium Bi-Pin)
- **WATTAGE:** 12W
- **WAVELENGTH:** 365nm

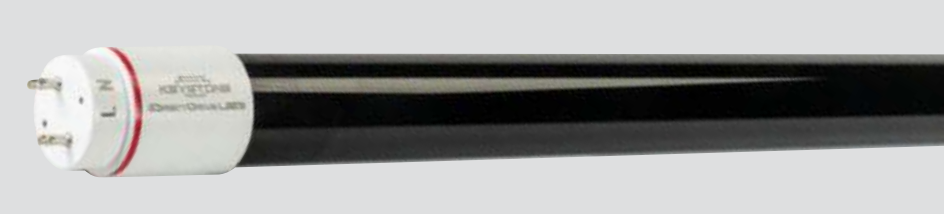

PRODUCT FEATURES

- Replacement for conventional ultraviolet lamp
- BLB glass minimizes visible UV light
- 20,000+ hour lifetime
- Approximately 40% more energy efficient than standard F40T8 BLB lamps
- Environmentally friendly: No mercury used
- Operating temperature: –20°C/–4°F to 45°C/113°F
- Integral driver (isolated) eliminates the need for external driver or ballast
- Instant startup
- Not for use in sealed / vapor tight fixtures

OPERATING SPECIFICATIONS

ELECTRICAL CHARACTERISTICS

Input Voltage	Input Current	Power Consumption	Power Factor	UV Wavelength	Beam Angle
120–277Vac	0.10A @ 120V 0.04A @ 277V	12W	>0.9	365nm	240°

RATED LIFE

L70 (Hours)	20,000

ULTRAVIOLET WAVELENGTH

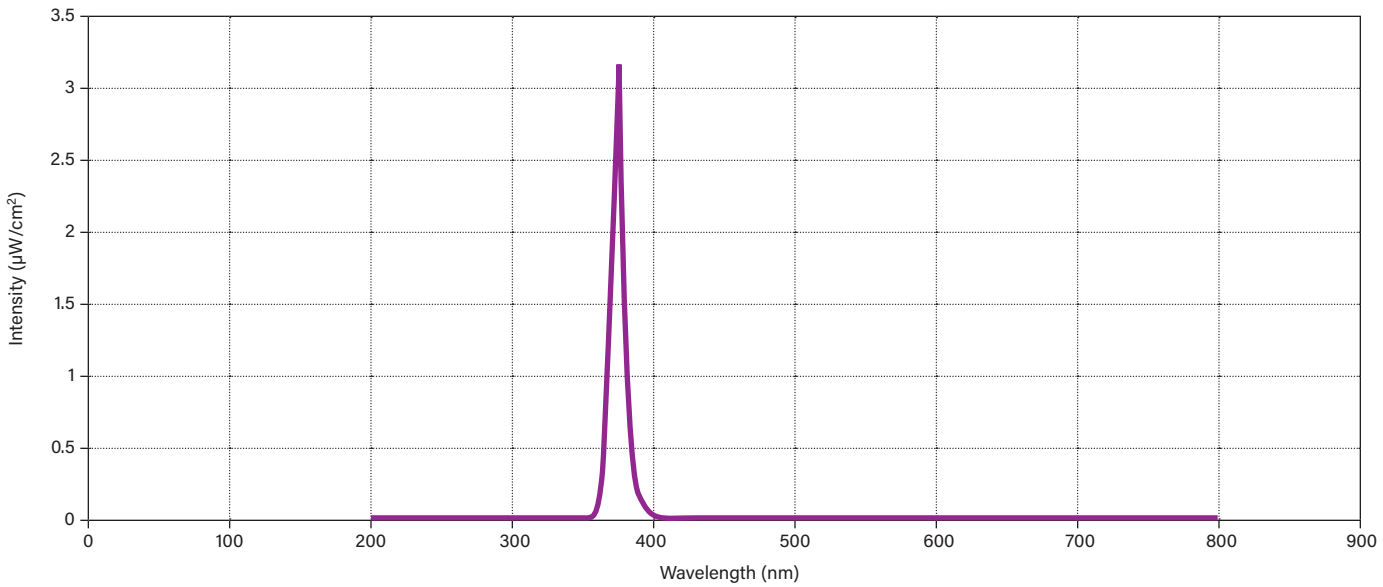

SINCE 1945 KEYSTONE LIGHT MADE EASY

DIRECT DRIVE LED
LINE VOLTAGE T8 TUBES

KT-LED12T8-48G-BL-D
T8 LED BLACK LIGHT LAMP

PHYSICAL CHARACTERISTICS

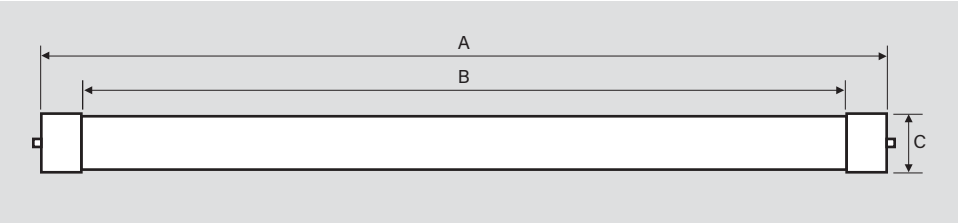

LAMP DIMENSIONS

A (Body Length)	47.22"
B (Illuminated Length)	44.31"
C (Diameter)	1.10"

NOMINAL LENGTH: 48"
BASE TYPE: G13 (Medium Bi-Pin)

SINGLE-ENDED WIRING DIAGRAM

1. Cut all existing connections to ballast as shown below and remove ballast. See *Figure A* for typical ballast configurations. **Note: Single-ended wiring requires non-shunted lampholders.**

FIGURE A **TYPICAL BALLAST CONFIGURATIONS**

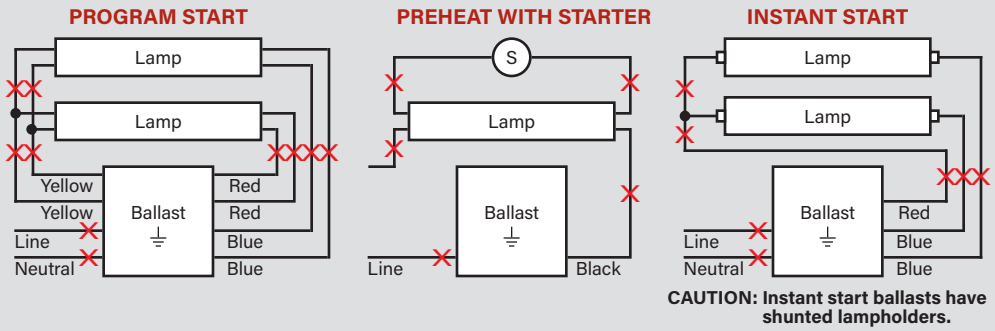

2. Rewire fixture as shown below.

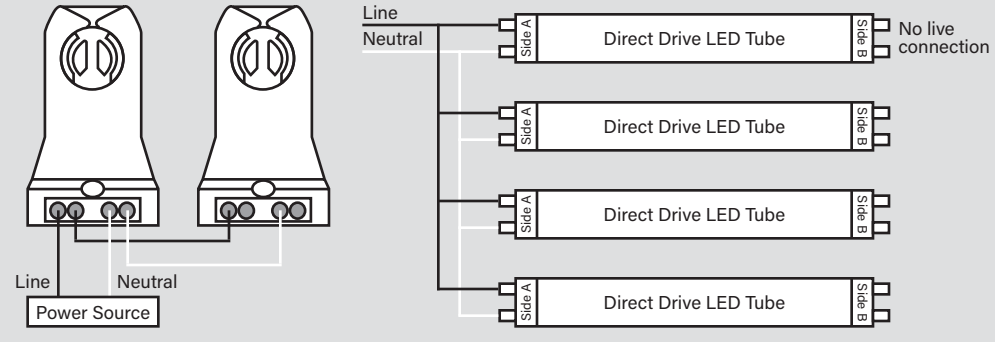

TYPICAL NON-SHUNTED LAMPHOLDER

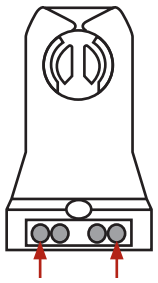

CAUTION: FOR SINGLE-ENDED WIRING USE ONLY NON-SHUNTED LAMPHOLDERS.

For single-ended wiring, do not install product in a fixture with shunted lampholders (found in all fixtures using instant start ballasts). If the current lampholders are shunted, remove them and replace them with non-shunted lampholders. Make new connections directly to terminals as indicated above. Keystone can provide any style replacement lampholders. Call us at 800-464-2680.

Caution: These lamps emit light in the UV-A Light spectrum (315–400nm) during operation. Avoid prolonged and / or repeated exposure under light source and do not stare directly at the light source. Exposure at less then 12" should be limited. Certain medications and chemicals can increase an individual's sensitivity. Consult your physician for specific information. Protective eyewear should be worn in occupational situations involving long-term exposure in close proximity to the lamp. This lamp is not intended and should not be used for diagnostic, therapeutic, or cosmetic purposes.

SINCE 1945
KEYSTONE
LIGHT MADE EASY

DIRECT DRIVE LED
LINE VOLTAGE T8 TUBES

KT-LED12T8-48G-BL-D

T8 LED BLACK LIGHT LAMP

ORDERING INFORMATION

ORDER CODE	PACK QTY.	ITEM STATUS
KT-LED12T8-48G-BL-D	25	Quick Ship

CATALOG NUMBER BREAKDOWN

KT-LED12T8-48G-BL-D

1 2 3 4 5 6 7 8

1 **Keystone Technologies**
2 **LED Lamp**
3 **Wattage**
4 **Lamp Type**
5 **Nominal Length (Inches)**
6 **Glass Construction**
7 **Black Light**
8 **Direct Drive**