SINCE 1945 KEYSTONE LIGHT MADE EASY®

DIRECT DRIVE LED
LINE VOLTAGE T8 TUBES

KT-LED10.5T8-48GC-850-D

T8 LED LAMP

DESCRIPTION

10.5W T8 LED | 5000K | >83 CRI | High-Efficiency

10 YEAR LIMITED WARRANTY

- **LAMP TYPE:** Linear
- **BULB TYPE:** T8 LED
- **BASE TYPE:** G13 (Medium Bi-Pin)
- **WATTAGE:** 10.5W
- **COLOR TEMPERATURE:** 5000K
- **COLOR RENDERING INDEX (CRI):** >83
- **WARRANTY:** 10 Years



PRODUCT FEATURES

- Replacement for conventional fluorescent lamp
- 50,000+ hour lifetime
- Approximately 40% more energy efficient than standard F32T8 lamps
- Environmentally friendly: No mercury used
- UL Classified
- Operating temperature: –20ºC/ – 4ºF to 45ºC/113ºF
- Integral driver (isolated), eliminates the need for external driver or ballast
- 100+ Lumens per Watt
- Instant startup
- Frosted lens eliminates pixelation
- Improved lamp durability with shatterproof coated glass, designed to pass drop tests of 6' on hard surface
- NSF listed: NSF/ANSI Standard 2 – Food Equipment,
- Splash zone (not for direct food zone without additional fixture considerations)
- Lamp is dimmable when used with an appropriate dimming accessory (purchased separately). Contact Keystone for more details to find out what is best for the intended application
- Not for use in sealed / vapor tight fixtures

OPERATING SPECIFICATIONS

ELECTRICAL CHARACTERISTICS

Input Voltage	Power Consumption	Power Factor	Input Current
120–277Vac	10.5W	>0.9	0.094A @ 120V 0.040A @ 277V

PHOTOMETRIC CHARACTERISTICS

Color Temperature (CCT)	5000K
Luminous Flux	1750 lm
Color Rendering Index (CRI)	>83
Efficacy	162 lm/W
Beam Angle	240º
Visible Light Area	325º

RATED LIFE

L70 (Hours)	50,000

SPECTRAL DISTRIBUTION

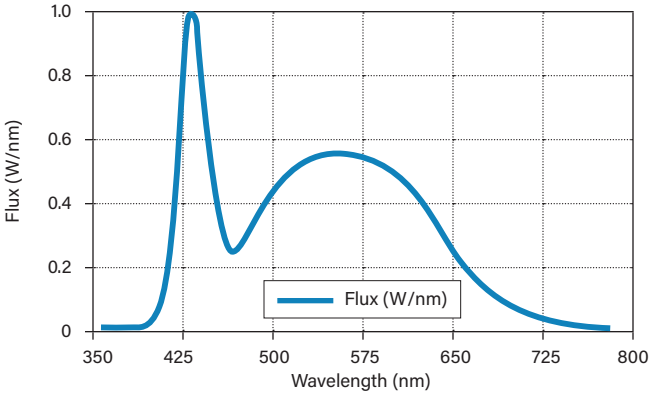

POLAR CANDELA DISTRIBUTION

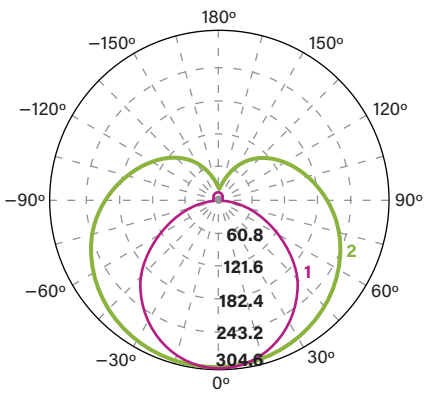

Maximum Candela = 1248.55
Located at
Horizontal Angle = 0, **Vertical Angle** = 0

1 **Violet** Vertical Plane through Horizontal Angles (90 –270)
2 **Green** Vertical Plane through Horizontal Angles (0 –180)

SINCE 1945 KEYSTONE LIGHT MADE EASY®

DIRECT DRIVE LED
LINE VOLTAGE T8 TUBES

KT-LED10.5T8-48GC-850-D
T8 LED LAMP

WIRING DIAGRAMS

1. Cut all existing connections to ballast as shown below and remove ballast.

TYPICAL BALLAST CONFIGURATIONS

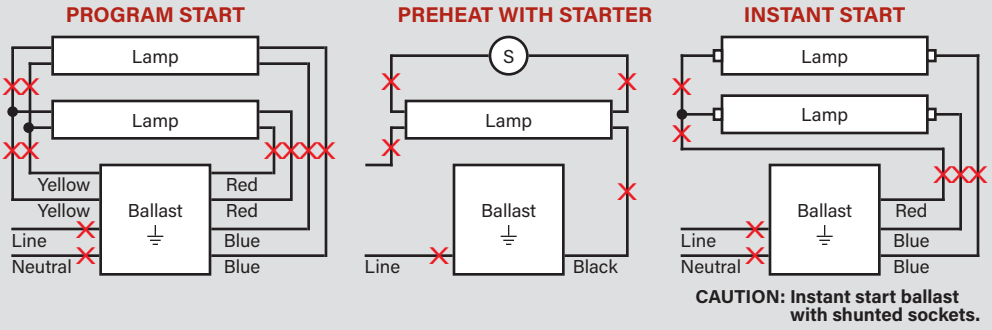

2. Re-wire fixture as shown below.

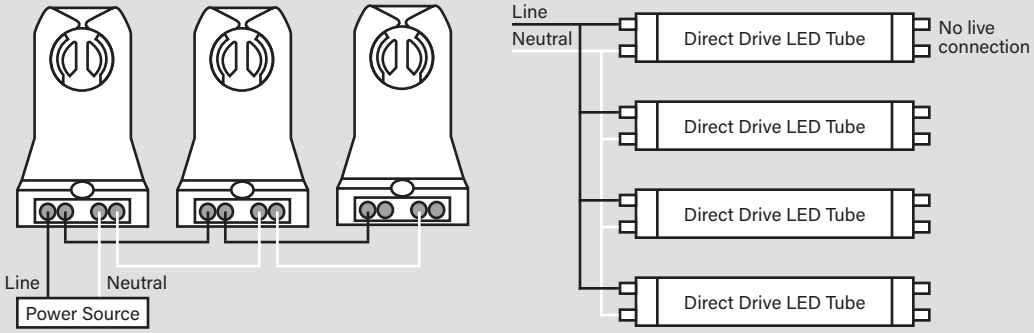

TYPICAL NON-SHUNTED LAMPHOLDER

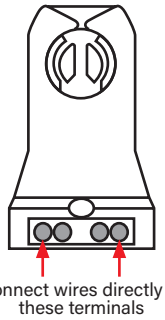

CAUTION: USE *ONLY* NON-SHUNTED LAMPHOLDERS.

Do not install product in a fixture with shunted lampholders (found in all fixtures using instant start ballasts). If the current lampholders are shunted, remove them and replace them with non-shunted lampholders. Make new connections directly to terminals as indicated above.

Keystone can provide any style replacement lampholders.

Call us at 800-464-2680.

PHYSICAL CHARACTERISTICS

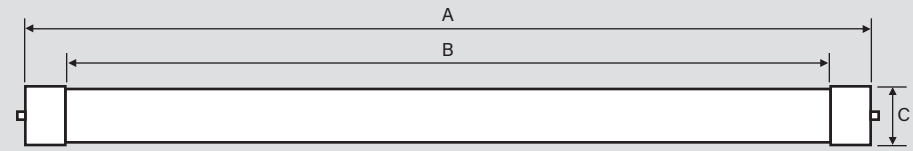

LAMP DIMENSIONS

A (Illuminated Length)	44.38"
B (Body Length)	47.15"
C (Diameter)	1.10"

NOMINAL LENGTH: 48"

BASE TYPE: G13 (Medium Bi-Pin)

SINCE 1945
KEYSTONE
LIGHT MADE EASY®

DIRECT DRIVE LED
LINE VOLTAGE T8 TUBES

KT-LED10.5T8-48GC-850-D
T8 LED LAMP

ORDERING INFORMATION

ORDER CODE	PACK QTY.	UPC	EASY CODE	DLC PRODUCT ID
KT-LED10.5T8-48GC-850-D-CP	25	TBD	TBD	PL14MZNXMSM5

CATALOG NUMBER BREAKDOWN

KT-LED10.5T8-48GC-850-D-CP

1 2 3 4 5 6 7 8 9 10

1. Keystone Technologies
2. LED Lamp
3. Wattage
4. Lamp Type
5. Nominal Length (Inches)
6. Shatterproof Coated Glass
7. 800 Series
8. Color Temperature
9. Direct-Drive Series
10. Packaging Style