INSTALLATION AND OPERATING INSTRUCTIONS

Safety and Electrical Parameters Continued

This device complies with Part 15 of the FCC Rules. Operation is subject to the following two conditions: (1) this device may not cause harmful interference, and (2) this device must accept any interference received, including interference that may cause undesired operation.

1. These LED tubes are intended for lighting systems only.
2. These LED tubes are for indoor use only. Maximum ambient temperature must not exceed 45°C (113ºF).
3. Avoid use in sunlight, abnormal heat, or moist / condensing environments.
   - Working temperature :-20°C~45°C (-4ºF~113ºF)
   - Working humidity : 30%~85%
   - Storage temperature : -40°C~65°C (-40ºF~149ºF)
   - Storage humidity : 10%~90%
4. These LED tubes are not intended to be repaired by the user, manufacturer, or service personnel in any case of failure.
5. These LED tubes are constructed such that they do not rely upon the luminaire enclosure for protection against accidental contact with live parts.
6. These LED tubes are intended to be used in dry or damp locations only.
7. These LED tubes are not for use with dimmers.
8. These LED tubes are not intended for use with emergency exit fixtures of any type.
9. These tubes are intended to be installed in the same orientation as the fluorescent tubes they are replacing.

WARNING: Risk of fire or electric shock. Installation of this Retrofit Kit requires knowledge of electrical systems. If you are not qualified, do not attempt installation, and contact a qualified electrician.

AVERTISSEMENT: Risque d'incendie ou de choc electrique. L'installation de ce kit Retrofit necessite cifiques des systemes electriques. Si vous n'etes pas qualifie, n'essayez pas de l'installer, et prenez contact avec un electricien qualifie.

Install this kit only in luminaires that have the construction features and dimensions shown in the photographs and drawings.
Installez ce kit dans les luminaires qui disposent des caracteristiques de conception et des dimensions indiquees sur les photographies et sur les schemas.

Do not make or alter any open holes in an enclosure of wiring or electrical components during kit installation.
Ne pas agrandir ou modifier les trous ouverts au sein du cablage ofu sur les composants electriques lors de l'installer, du kit.

To prevent damage to wiring, do not expose wires to the edges of sheet metal or other sharp objects.
Pour eviter d'endommager le cablage, ne pas exposer les fils sur les bords de tole metalliques ou sur d'autres objets pointus.

WARNING: For Single-Ended wiring installations: To avoid potential fire or shock hazard, do not use this retrofit kit in luminaires employing shunted bi-pin lamp holders. Note: Shunted lamp holders are found only in fluorescent luminaires with Instant-Start ballasts. Instant-start ballasts can be identified by the words "Instant Start" or "I.S." marked on the ballast. This designation may be in the form of a statement pertaining to the ballast itself, or may be combined with the marking for the lamps with which the ballast is intended to be used, for example F40T12/IS. For more information, contact Keystone Technologies.

AVERTISSEMENT: Pour les installations de câblage à extrémité simple: Pour eviter tout incendie potentiel ou tout risque de choc, ne pas utilise, ce kit de renovation dans /es luminaires utilisant des douilles shuntees a deux broches.Remarque: /es supports de lampe shunte ne se trouvent que sur /es luminaires fluorescents avec ballasts et a allumage instantane. Les ballastes a allumage instantane peuvent etre identifies par Jes mots "Demarrage instantane" ou "I.S" sur la ballaste. Cette designation peut etre presentee sous la forme d'une declaration relatives au ballast lui-meme, ou peut etre combinee avec le marquage pour Jes lampes dont le ballast est destine a etre utilise, par exemple le modele F40T12 I EST. Pour plus d'informations, contactez le fabricant du kit de renovation de luminaire LED.

Installers should not disconnect existing wires from lamp holder terminals to make new connections at lamp holder terminals. Instead installers should cut existing lamp holder leads away from the lamp holder and make new electrical connections to lamp holder lead wires by employing applicable connectors.

Installers should not disconnect existing wires from lamp holder terminals to make new connections at lamp holder terminals. Instead installers should cut existing
Les installateurs ne doivent pas debrancher /es cables existants de terminaux de support de lampe pour faire de nouvelles connexions dans Jes douilles. Au lieu instal/ateurs doivent couper Jes cables existants de terminaux de support de /ampe et faire de nouvelles connexions electriques en utilisant des connecteurs applicables.

WARNING: RISK OF FIRE OR ELECTRIC SHOCK. DO NOT ALTER, RELOCATE, OR REMOVE WIRING, LAMP HOLDERS, POWER SUPPLY, OR ANY OTHER ELECTRICAL COMPONENT.

AVERTISSEMENT: RISQUES D'/NCENDIE OU DE CHOC ELECTRIQUE.NE PAS MOD/ER, REPLACER OU DEBRANCHER LES CABLES, LES DOUILLES D'ALIMENTATION, OU TOUTE AUTRE COMPOSANT ELECTRIQUE.

THE RETROFIT ASSEMBLY IS ACCEPTED AS A COMPONENT OF A LUMINAIRE WHERE THE SUITABILITY OF THE COMBINATION SHALL BE DETERMINED BY UL OR AUTHORITIES HAVING JURISDICTION.

LE MONTAGE DU RETROFIT EST ACCEPTEE COMME COMPOSANT D'UN LUM/NA/RE OU LA PERTINENCE DE LA COMB/NA/SON SERA DETERMINEE PAR L 'UL OU LES AUTORITES AYANT LA JURID/CT/ON CORRESPONDANTE.

SINCE 1945 KEYSTONE
DIRECT DRIVE DX2
SINGLE OR DOUBLE ENDED LINE VOLTAGE LED TUBES

INSTALLATION AND OPERATING INSTRUCTIONS

Catalog Numbers: KT-LED9T8-48G-8XX-DX2

Product includes the following components:

PARTS	QUANTITY (Carton Pack)
LED Tube	25 pcs/box
Installation Instruction Sheet	1

CAUTION: Before installing, make certain the AC power to the fixture is off.

CAUTION: The electrical rating of this product is 120-277V. Installer must confirm that there is 120-277V at the fixture before installation.

CAUTION: LEDs are extremely bright. Do not look directly at the LED light source for extended time as over-exposure may cause harm to the eyes.

CAUTION: Not rated for use in Vapor Tight style fixtures. Do not install in vapor tight style fixtures. Doing so will void the warranty.

Instructions for Single-Ended Wiring Installation

Removing Existing Fluorescent System

1. Disconnect power from fixture.
2. Remove fluorescent lamp(s).
3. Remove lens and wiring compartment, if applicable.
4. Cut all wires connected to the ballast as shown below and remove ballast.
5. Identify what type of lampholders are in fixture. Single-Ended wiring installations of Keystone Direct Drive **DX2** tubes require non-shunted G13 lampholders.
6. If applicable, replace lampholders with non-shunted lampholders.

Typical Ballast Configurations

✕ Indicates Where to Cut Existing Wiring

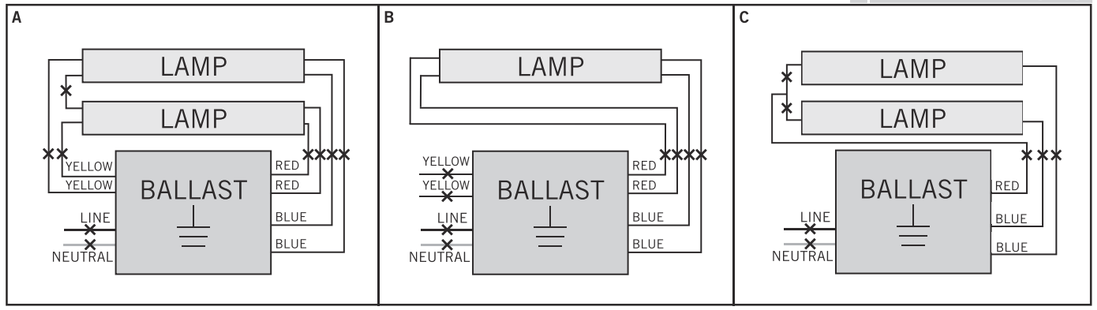

CAUTION: Use only non-shunted lampholders for Single-Ended wiring installations. Do not perform Single-Ended wiring installation of product in a fixture with shunted lampholders (found in all fixtures using instant start ballasts). If the existing lampholders are shunted, and Single-Ended wiring is desired, remove and replace them with non-shunted lampholders (or remove the external shunt if applicable). Make new connections directly to lampholder terminals as shown in Figure 1 below.

Typical Non-Shunted Lampholder

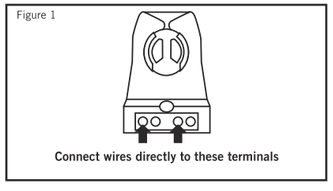

Typical Shunted Lampholders

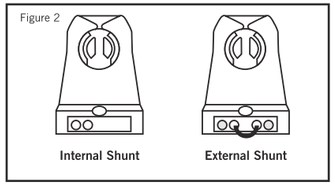

Keystone Technologies • Philadelphia, PA • Phone (800) 464-2680 • **www.keystonetech.com**

INSTALLATION AND OPERATING INSTRUCTIONS

Installing the Lamps

NOTE: For Single-Ended wiring installations, power is only applied to endcap labeled Side A. DO NOT apply power to Side B.

I. Confirm that power is still disconnected from fixture.
II. Make sure fixture is properly grounded.
III. Follow step 1 for single lamp application or steps 2 & 3 for multiple lamp application, based on the number of lamps in the fixture:

Single Lamp

1. On the Side A lampholder, connect line (L) and neutral (N) AC wires to the corresponding pins marked (L) and (N) on the endcap. If only one lamp is being installed, proceed to step 4.

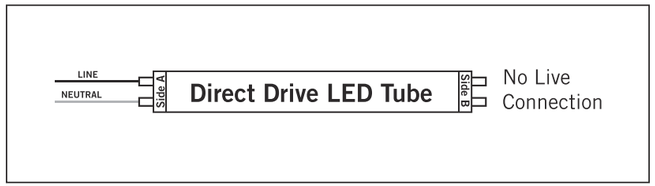

Multiple Lamps

2. Follow the steps above for single lamp connection to connect the first lamp.
3. Connect the terminals on the powered lampholder on the first lamp to the matching terminals on the powered lampholder on the second lamp with line and neutral wires as shown below. Continue daisy-chain connection for each additional lamp.

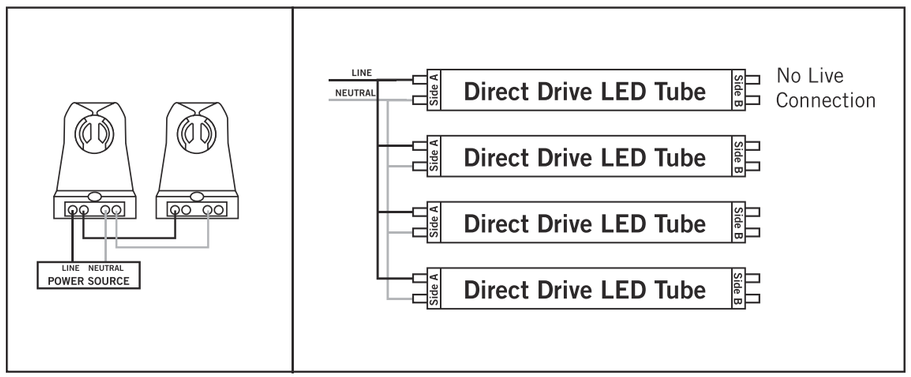

4. Complete all electrical connections with appropriate connectors/wire nuts as needed, per all local and national electrical codes.
NOTE: There should not be any exposed wires from sockets left unconnected.

5. Replace wiring compartment cover.
6. Install all of the Keystone Direct Drive DX2 tubes, making sure Side A is installed in the lampholders wired to the line and neutral. Install LED tubes so that the LEDs are pointed in the proper direction for illumination, and install any lens or diffuser as applicable.
7. Apply power to fixture and check for illumination.

Instructions for Double-Ended Wiring Installation

Removing Existing Fluorescent System

1. Disconnect power from fixture.
2. Remove fluorescent lamp(s).
3. Remove lens and wiring compartment, if applicable.
4. Cut all wires connected to the ballast as shown in Diagrams A, B, and C on Page 1.
5. Identify what type of lampholders are in fixture. Double-Ended wiring installations of Keystone Direct Drive DX2 tubes can be used with shunted G13 or nonshunted G13 lampholders (with instructions to externally shunt). See Figures 1 and 2 on Page 1.

SINCE 1945 KEYSTONE

DIRECT DRIVE DX2
SINGLE OR DOUBLE ENDED LINE VOLTAGE LED TUBES

INSTALLATION AND OPERATING INSTRUCTIONS

Installing the Lamps

I. Confirm that power is still disconnected from fixture.
II. Make sure fixture is properly grounded.
III. Follow step 1 for single lamp application or steps 2 & 3 for multiple lamp application, based on the number of lamps in the fixture:

Single Lamp

1. From AC wires, connect line (L) to Side A lampholder and neutral (N) to Side B lampholder. If only one lamp is being installed, proceed to step 4.

Shunted Lampholders



Nonshunted Lampholders



Multiple Lamps

2. Follow the steps above for single lamp connection to connect the first lamp.
3. Connect the terminals from the first lamp to the matching terminals on the lampholder of the second lamp with line and neutral wires as shown below. Continue daisy-chain connection for each additional lamp.

Shunted Lampholders

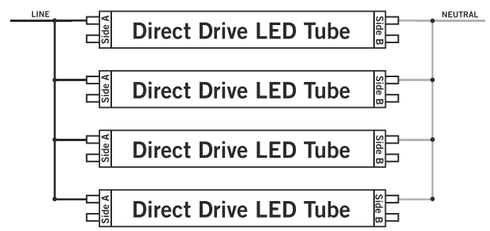

Nonshunted Lampholders

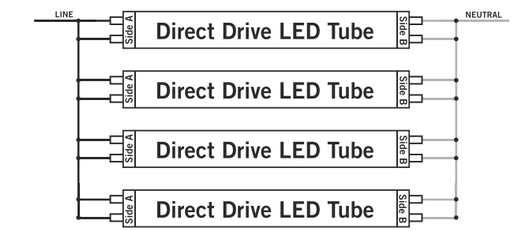

4. Complete all electrical connections with appropriate connectors/wire nuts as needed, per all local and national electrical codes.
NOTE: There should not be any exposed wires from sockets left unconnected.

5. Replace wiring compartment cover.
6. Install all of the Keystone Direct Drive DX2 tubes. Install LED tubes so that the LEDs are pointed in the proper direction for illumination, and install any lens or diffuser as applicable.
7. Apply power to fixture and check for illumination.

Safety and Electrical Parameters

These LED tubes are intended to retrofit a UL Listed, surface mount, type IC or non-IC, recessed mount fluorescent luminarie that uses a maximum of 6 straight tubular lamps with or without diffuser. The minimum dimensions of the luminaire are tabulated below:

LED TUBE MODEL NO.	Lamp Compartment Dimensions (cm)	Max. Lamps in Luminaire	Space Between Lampholders (cm)
KT-LED9T8-48G-8XX-DX2	122 x 47 x 9	6	3.5

To comply with the published safety standards, the following must be observed when using this LED tube:

LED TUBE MODEL NO.	INPUT VOLTAGE	INPUT FREQUENCY	INPUT CURRENT	INPUT WATTAGE	TUBE LENGTH
KT-LED9T8-48G-8XX-DX2	120-277V	50-60 Hz	0.105A	9.5W	48"