KEYSTONE SINCE 1945 LIGHT MADE EASY

DIRECTDRIVE DX2

SINGLE- OR DOUBLE-ENDED LINE VOLTAGE LED TUBES

KT-LED9T5HE-24GC-8XX-DX2 /G2

T5 LED LAMP

DESCRIPTION

9W T5 LED | 3500/4000/5000K | >80 CRI | High-Efficiency | Single- or Double-Ended Wiring

- **LAMP TYPE:** Linear
- **BULB TYPE:** T5 LED
- **BASE TYPE:** G5 (Miniature Bi-Pin)
- **WATTAGE:** 9W
- **COLOR TEMPERATURE:** 3500/4000/5000K
- **COLOR RENDERING INDEX (CRI):** >80
- **WARRANTY:** 5 Years



PRODUCT FEATURES

- Replacement for conventional fluorescent lamp
- Single- or Double-Ended Wiring
- Instant startup
- Direct replacement for F14T5 fluorescent lamp
- Frosted lens eliminates pixelation
- Improved lamp durability with shatterproof coated glass, designed to pass drop tests of 6' on hard surface
- Environmentally friendly: No mercury used
- Operating Temperature: –20ºC/–4ºF to 45ºC/113ºF
- Storage Temperature: -40ºC/-40ºF to 70ºC/158ºF
- Operating Humidity: 35-80%
- Integral driver (isolated) eliminates the need for external driver or ballast
- Compatible with Keystone AC Emergency Drivers: KT-EMRG-LED-5-500-AC, KT-EMRG-LED-5-500-AC/DF, KT-EMRG-LED-12-1200-AC, or KT-EMRG-LED-12-1200-AC /DF
- 50,000+ hour lifetime
- UL Classified
- NSF Listed: NSF/ANSI Standard 2: Food equipment, splash zone (component level—not for direct food zone without additional fixture considerations)
- Meets FCC part 15 Class B standards
- Not for use in sealed / vapor tight fixtures

PERFORMANCE SPECIFICATIONS

Catalog Number	Input Voltage	Power Consumption	Color Temperature (CCT)	Luminous Flux	Efficacy	Beam Angle	Visible Light Area	Power Factor	Input Current	Rated Lifetime
KT-LED9T5HE-24GC-835-DX2 /G2	120-277Vac	9W	3500K	1150	128 lm/W	170°	280°	>0.9	75mA @ 120V 35mA @ 277V	50,000 Hours
KT-LED9T5HE-24GC-840-DX2 /G2			4000K	1200	133 lm/W					
KT-LED9T5HE-24GC-850-DX2 /G2			5000K	1200	133 lm/W					

SINCE 1945 KEYSTONE LIGHT MADE EASY

DIRECTDRIVE DX2
SINGLE- OR DOUBLE-ENDED LINE VOLTAGE LED TUBES

KT-LED9T5HE-24GC-8XX-DX2 /G2

T5 LED LAMP

PHOTOMETRIC SPECIFICATIONS

SPECTRAL DISTRIBUTION

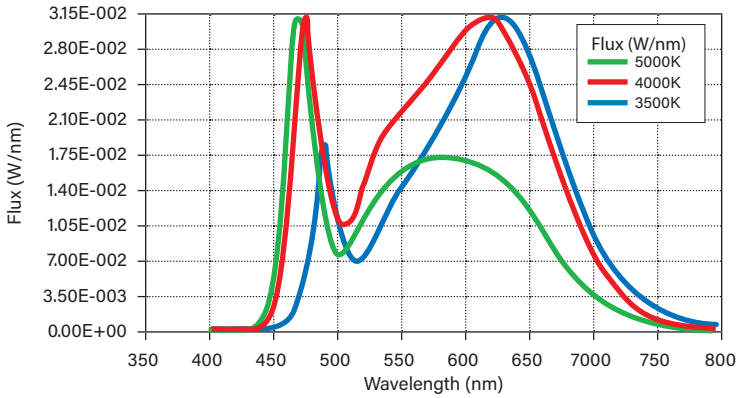

PHYSICAL SPECIFICATIONS

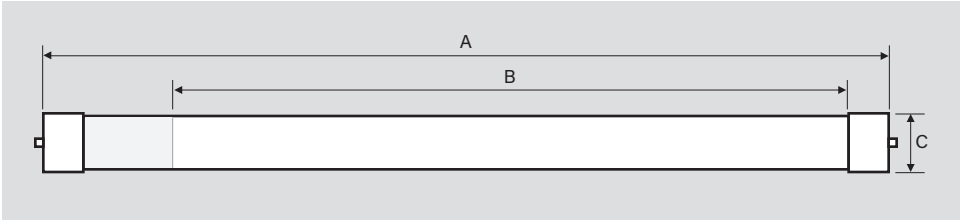

LAMP DIMENSIONS

A (Body Length)	21.62"
B (Illuminated Length)	17.63"
C (Diameter)*	0.77"

NOMINAL LENGTH: 24"

BASE TYPE: G5 (Miniature Bi-Pin)

**Though nominally referred to as a T5, this lamp has a T6 diameter.*

SINCE 1945 KEYSTONE LIGHT MADE EASY

DIRECT DRIVE DX2
SINGLE- OR DOUBLE-ENDED LINE VOLTAGE LED TUBES

KT-LED9T5HE-24GC-8XX-DX2 /G2
T5 LED LAMP

SINGLE-ENDED WIRING DIAGRAM

1. Cut all existing connections to ballast as shown below and remove ballast. *Figure A* for typical ballast configurations. **Note: Single-ended wiring requires non-shunted lampholders.**

FIGURE A TYPICAL BALLAST CONFIGURATIONS

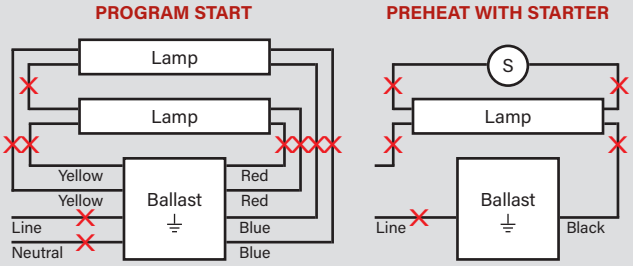

2. Rewire fixture as shown below.

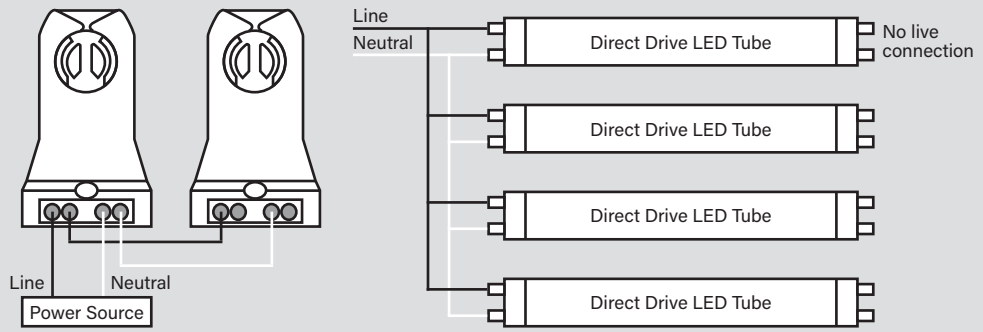

TYPICAL NON-SHUNTED LAMPHOLDER

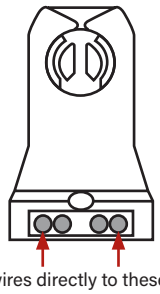

Connect wires directly to these terminals

CAUTION: FOR SINGLE-ENDED WIRING USE *ONLY* NON-SHUNTED LAMPHOLDERS.

For Single-ended wiring, do not install product in a fixture with shunted lampholders (found in all fixtures using instant start ballasts).
If the current lampholders are shunted, remove them and replace them with non-shunted lampholders. Make new connections directly to terminals as indicated above.
Keystone can provide any style replacement lampholders.
Call us at 800-464-2680.

DOUBLE-ENDED WIRING DIAGRAM

1. Cut all existing connections to ballast as shown below ans remove ballast. See *Figure A* above for typical ballast configurations.

2. Re-wire fixture as shown below. For double-ended wiring, use either shunted or nonshunted lampholders.

NOTE: There should not be any exposed wires at the end of installation.

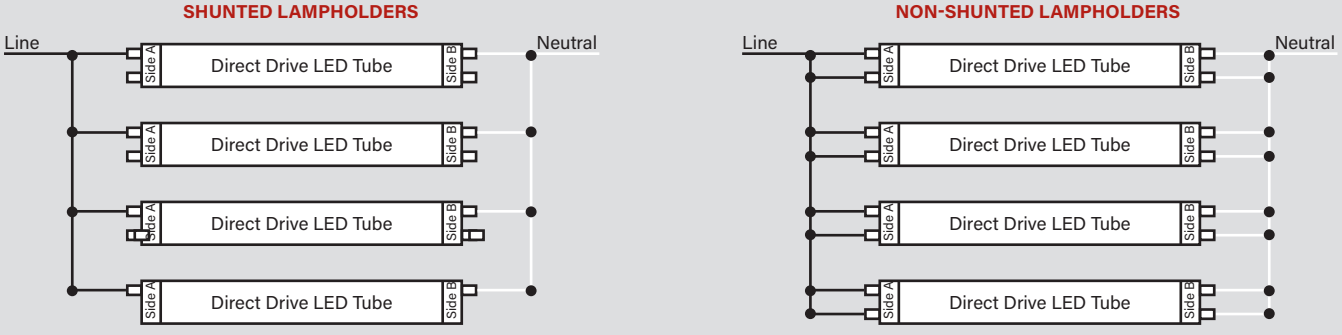

SINCE 1945 KEYSTONE LIGHT MADE EASY

DIRECTDRIVE DX2
SINGLE- OR DOUBLE-ENDED LINE VOLTAGE LED TUBES

KT-LED9T5HE-24GC-8XX-DX2 /G2
T5 LED LAMP

ORDERING INFORMATION

ORDER CODE	PACK QTY.	UPC	EASY CODE
KT-LED9T5HE-24GC-835-DX2 /G2	25 pcs	843654158150	EHK-96
KT-LED9T5HE-24GC-840-DX2 /G2	25 pcs	843654158167	COS-86
KT-LED9T5HE-24GC-850-DX2 /G2	25 pcs	843654158174	XOE-82

CATALOG NUMBER BREAKDOWN

KT-LED9T5HE-24GC-8XX-DX2 /G2

1 2 3 4 5 6 7 8 9 10

1. Keystone Technologies
2. LED Lamp
3. Wattage
4. Lamp Type
5. Nominal Length (Inches)
6. Shatter-Proof Coated Glass
7. 80 CRI
8. Color Temperature
9. Single- or Double-Ended Wiring
10. Second Generation