SINCE 1945 KEYSTONE LIGHT MADE EASY

DIRECTDRIVE DX2
SINGLE- OR DOUBLE-ENDED LINE VOLTAGE LED TUBES

COLOR SELECT

KT-LED10.5T8-48GX-8CSJ-DX2

T8 LED LAMP

DESCRIPTION

10.5W T8 LED Lamp | 3000/3500/4000/5000/6500K | >80 CRI | High-Efficiency | Single- or Double-ended Line Voltage Wiring

RoHS Compliant

10 YEAR LIMITED WARRANTY

- **LAMP TYPE:** Linear
- **BULB TYPE:** T8 LED
- **BASE TYPE:** G13 (Medium Bi-Pin)
- **WATTAGE:** 10.5W
- **COLOR TEMPERATURE:** 3000/3500/4000/5000/6500K
- **COLOR RENDERING INDEX (CRI):** >80
- **WARRANTY:** 10 Years

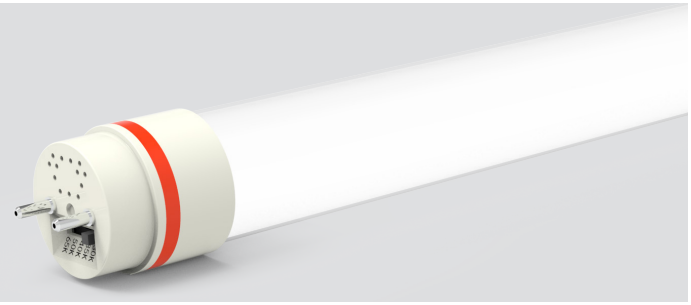

PRODUCT FEATURES

- Replacement for conventional fluorescent lamp
- Single- or double-ended line voltage wiring
- Keystone Color Select technology (3000/3500/4000/5000/6500K)
- Instant startup
- Frosted glass lens eliminates pixelation
- Approximately 60% more energy-efficient than standard F32T8 lamps
- Environmentally friendly: No mercury used
- 150+ Lumens per Watt
- Operating temperature: –20°C/–4°F to 45°C/113°F
- Storage temperature: –30°C/–22°F to 60°C/140°F
- Operating humidity: 10–80%
- Integral driver (isolated) eliminates the need for external driver or ballast
- Not compatible with Keystone AC emergency drivers: KT-EMRG-LED-5-500-AC, KT-EMRG-LED-5-500-AC/DF, KT-EMRG-LED-12-1200-AC, or KT-EMRG-LED-12-1200-AC /DF
- Meets FCC Part 15, Class B
- 50,000+ hour lifetime
- UL Classified
- Lamp is dimmable when used with an appropriate dimming accessory (purchased separately). Contact Keystone for more details to find out what is best for the intended application.
- Not for use in sealed / vapor tight fixtures

COLOR SELECT (CCT) ADJUSTMENT

- This fixture is equipped with field-adjustable Keystone Color Select technology.
- Adjustable CCT (3000/3500/4000/5000/6500K).
- Adjust dip switch to desired setting (preset to 4000K CCT).



ELECTRICAL SPECIFICATIONS

Input Voltage	Power Consumption	CCT*	Lumen Output	Efficacy	CRI	Beam Angle	Visible Light Area	Power Factor	THD	Input Current	Lifetime
120–277 Vac 60Hz	10.5W	3,000K	1,575	150 lm/W	>80	240°	325°	>0.9	>20%	90mA @120V 43mA @277V	50,000 hrs
		3,500K	1,600	152 lm/W							
		4,000K	1,650	157 lm/W							
		5,000K	1,650	157 lm/W							
		6,500K	1,600	152 lm/W							

** Preset to 4000K CCT; Color Uniformity: CCT (Correlated Color Temperature) range as per guidelines outlined in ANSI C78.377-2017*

SINCE 1945 KEYSTONE LIGHT MADE EASY

DIRECT DRIVE DX2
SINGLE- OR DOUBLE-ENDED LINE VOLTAGE LED TUBES

COLOR SELECT

KT-LED10.5T8-48GX-8CSJ-DX2
T8 LED LAMP

WIRING DIAGRAMS

WARNING: NOT COMPATIBLE WITH KEYSTONE AC EMERGENCY BACKUPS

SINGLE-ENDED WIRING DIAGRAM

1. Cut all existing connections to ballast as shown below and remove ballast. See Figure A for typical ballast configurations. **Note: Single-ended wiring requires non-shunted lampholders.**

FIGURE A **Typical Ballast Wiring Configurations**

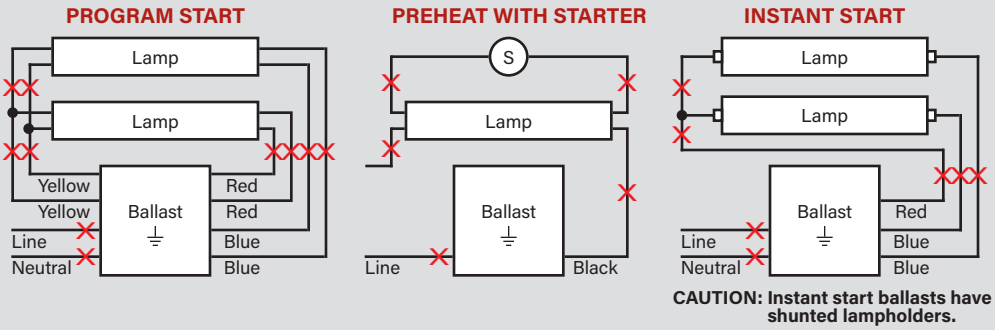

2. Rewire fixture as shown below.

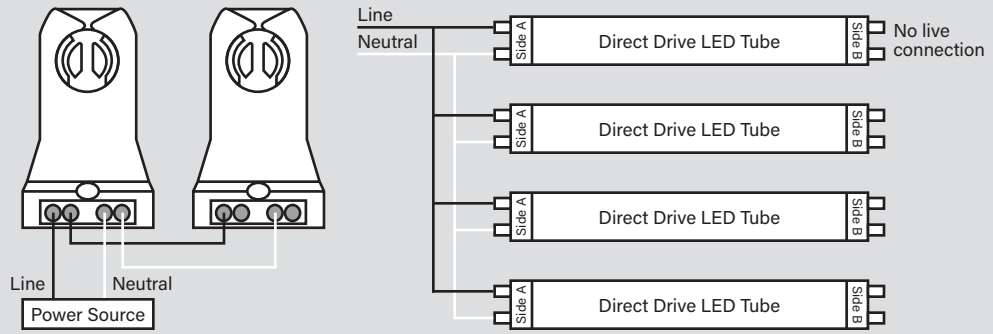

TYPICAL NON-SHUNTED LAMPHOLDER

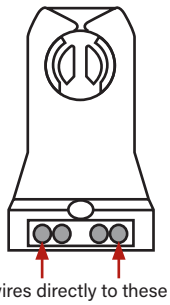

CAUTION: FOR SINGLE-ENDED WIRING USE *ONLY* NON-SHUNTED LAMPHOLDERS.

For Single-ended wiring, do not install product in a fixture with shunted lampholders (found in all fixtures using instant start ballasts). If the current lampholders are shunted, remove them and replace them with non-shunted lampholders. Make new connections directly to terminals as indicated above. Keystone can provide any style replacement lampholders. Call us at 800-464-2680.

DOUBLE-ENDED WIRING DIAGRAM

1. Cut all existing connections to ballast as shown below and remove ballast. See Figure A above for typical ballast configurations.
2. Re-wire fixture as shown below. For double-ended wiring, use either shunted or nonshunted lampholders.

NOTE: There should not be any exposed wires at the end of installation.

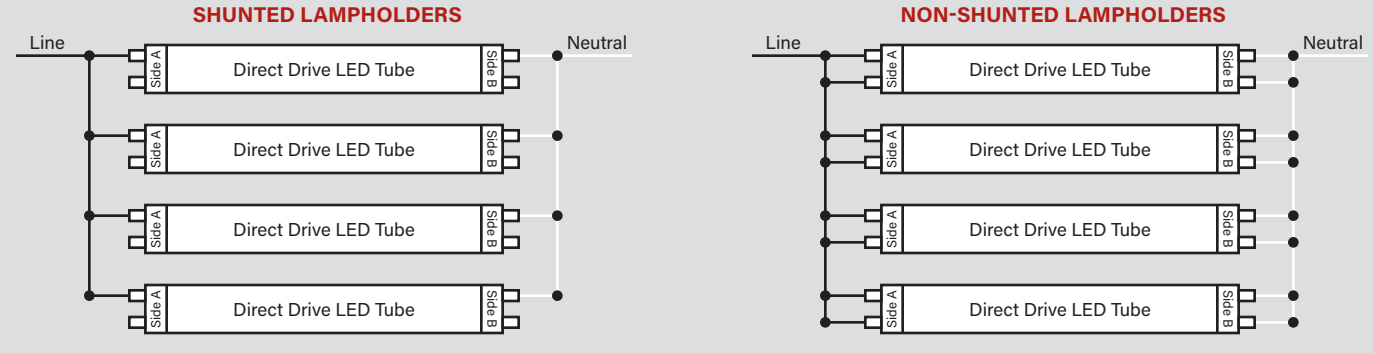

SINCE 1945 KEYSTONE LIGHT MADE EASY

DIRECTDRIVE DX2
SINGLE- OR DOUBLE-ENDED LINE VOLTAGE LED TUBES

COLOR SELECT

KT-LED10.5T8-48GX-8CSJ-DX2
T8 LED LAMP

PHOTOMETRIC SPECIFICATIONS

SPECTRAL DISTRIBUTION

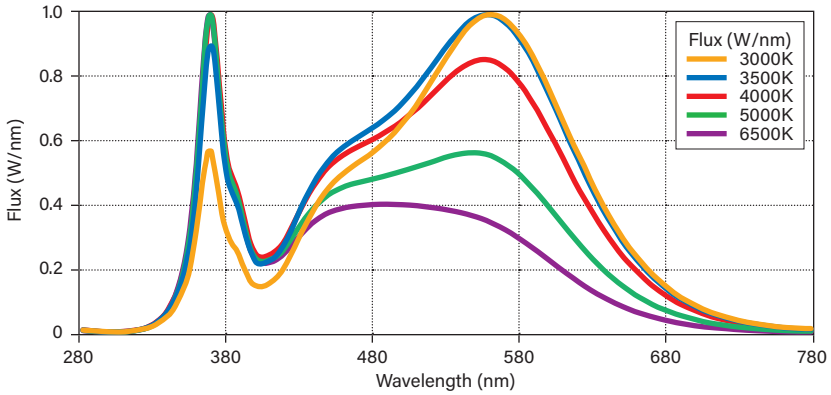

PHYSICAL SPECIFICATIONS

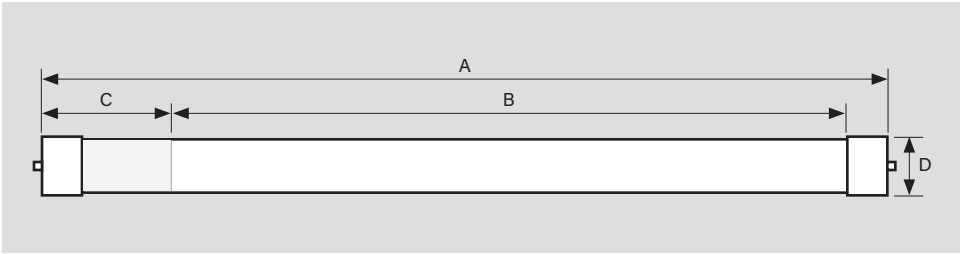

LAMP DIMENSIONS

A (Body Length)	47.20"
B (Illuminated Length)	44.00"
C (End Cap/Sticker Area)	2.25"
D (Diameter)	1.10"

NOMINAL LENGTH: 48"
BASE TYPE: G13 (Medium Bi-Pin)

ORDERING INFORMATION

ORDER CODE	CARTON QUANTITY	UPC	EASY CODE	DLC PRODUCT ID
KT-LED10.5T8-48G-8CSJ-DX2	25 pcs	843654140827	DSG-50	S-64IUCD
KT-LED10.5T8-48GC-8CSJ-DX2	25 pcs	843654171012	KAP-93	TBD

CATALOG NUMBER BREAKDOWN

KT-LED10.5T8-48GX-8CSJ-DX2

1 2 3 4 5 6 7 8 9 10

1 **Keystone Technologies**
2 **LED Lamp**
3 **Wattage**
4 **Lamp Type**
5 **Nominal Length (Inches)**
6 **Construction Type**
7 **CRI**
8 **Color Select**
9 **Color Select Designation**
10 **Single- or Double-Ended Line Voltage Wiring**

6 Construction Type

G	Glass
GC	Glass Coated

9 Color Select Designation

J	3000/3500/4000/5000/6500K