ABRA Neoteric Lighting Design

Assembly and Installation Instructions for Model's

50167ODW

Warning please make sure the electrical breaker is shut off before commencing with this installation

CAUTION - RISK OF FIRE

Installation of this fixture should be done by a licensed electrician or by a person familiar with local electrical codes and the construction and operation of this fixture.

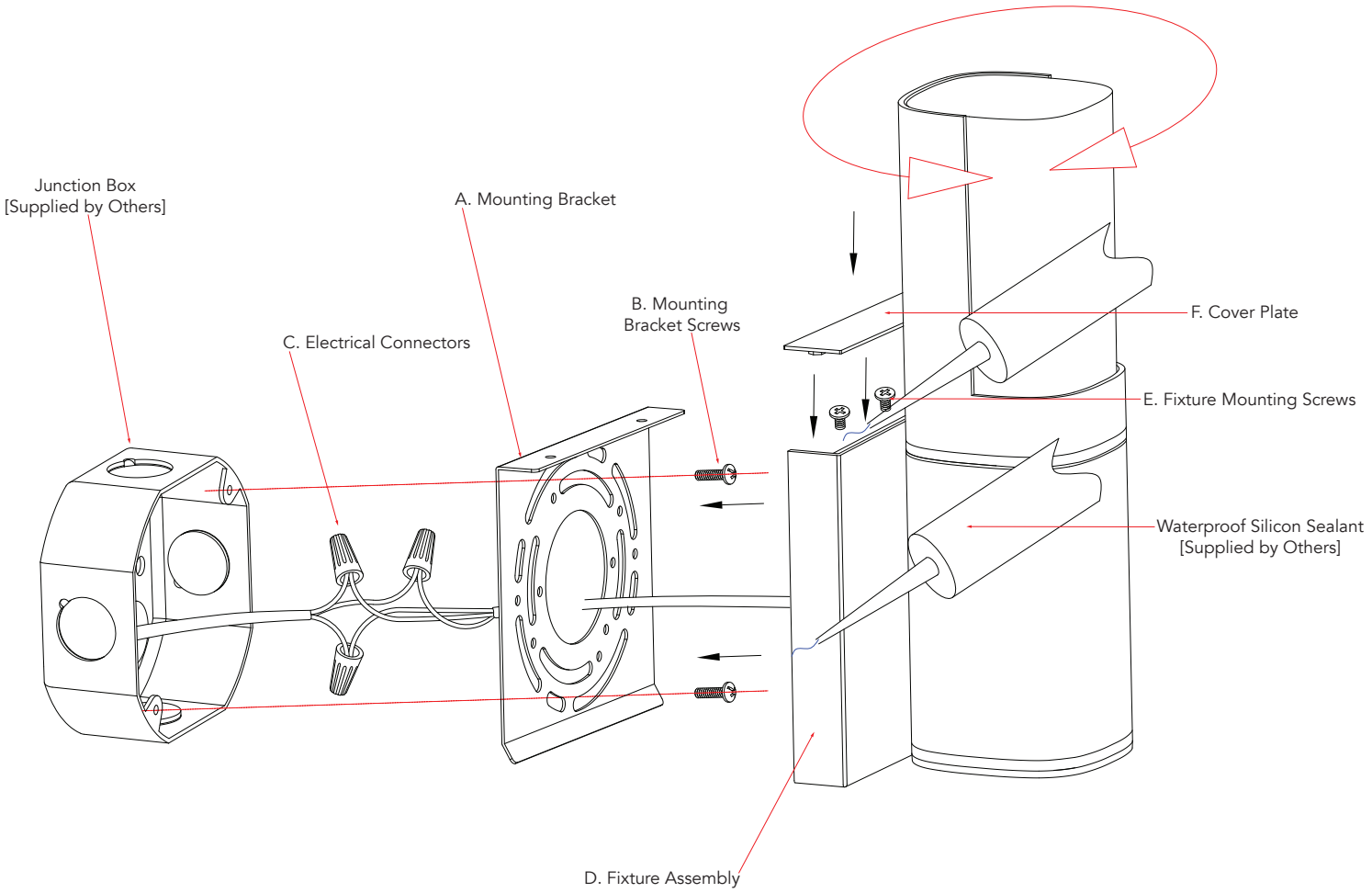

Package Contents

Part	Description	
A	Mounting bracket	1
B	Mounting bracket screws	2
C	Electrical Connectors	3
D	Fixture assembly	1
E	Fixture mounting screws	2
F	Cover plate	1

Installing the fixture

please ensure the electrical breaker is in the Off position before commencing

1	Attach the Mounting bracket **(A)** to the Junction Box [Supplied by Others] using the Mounting bracket screws **(B)**.
2	Connect the supply wires to the fixture wires using the supplied electrical wire connectors **(C)**. White supply wire to the White fixture wire, Black supply wire to Black fixture wire and the ground Bare Copper or Green wire to the Green fixture wire. Once the electrical wire connectors are securely fastened it is recommended to tape these connectors with electrical tape.
3	Secure the Fixture assembly **(D)** to the Mounting bracket **(A)** using the Fixture mounting screws **(E)**
4	Place the Cover plate **(F)** over the screws **(E)** and seal with a Waterproof Silicon Sealant [Supplied by Others] to seal the Fixture to the wall.
5	Then use the Waterproof silicon sealant to seal the Fixture to the wall.
6	Switch on the electrical breaker switch and your new fixture is ready for many years of trouble free use.