ABRA MODEL	30053FM-WH
FAMILY NAME	Tambourine

15" Low Profile Flushmount with Soft Uplight

UPC 00810035192164

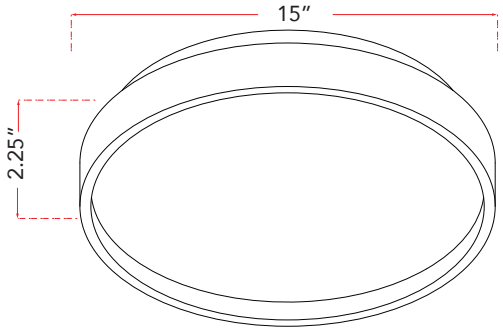



FIXTURE MATERIAL

Frame Material	Finishes Available	Diffuser Type	Diffuser Finish
Metal	BL-Black WH-White	Acrylic	Frosted

DIMENSIONS IN INCHES

Fixture			Mounting Plate
Diameter	Height		Diameter
15	2.25		10

CERTIFICATION

Label	Location	Rating
cETLus	Ceiling	Damp Location

LAMPING

Lamp Type	Lamp qty	Wattage	Max Wattage	Base	Kelvin	CRI	Initial Lumen's	Delivered Lumen's	Voltage
LED	1	30w	30w	Moduile	3CCT 2700k 3350k 4000k	90	2550	1785 estimated	120v

COMPATIBLE DIMMER'S

CL, ELV

J-BOX TYPE

4 x 4 Octagonal

SUPPLIED

SPECIAL NOTES

ABRA LIGHTING
NEOTERIC DESIGN

12151 Madera Way Riverside California 92503
Phone: 949-940-1155 • Toll Free 800-295-7121
www.abralighting.com

Project Name			
Date		**Type**	