ACCORD LIGHTING

Specifier: _____ Date: _____

Project name: _____

Project location: _____

7102 (E-26)

Name:	Oyster Accord Table Lamp 7102
Collection:	Oyster
Application:	Table Lamp
Construction:	Natural Wood Veneer, MDF and Glass

Specifications

Light Source:	1x 25W 120V - 240V (E26) Light Bulbs not Included
Color Temperature:	Lamp dependent
CRI:	Lamp dependent
Delivered Lumens:	Lamp dependent
Total Power:	Lamp dependent
Input Voltage:	120V - 240V
Input Frequency:	60 Hz
Canopy Dimension	N/A
Lamp Type:	E26- A15 (1.9" diameter)
Cable Lenght:	2.80mts/9.18'

Fixture Image

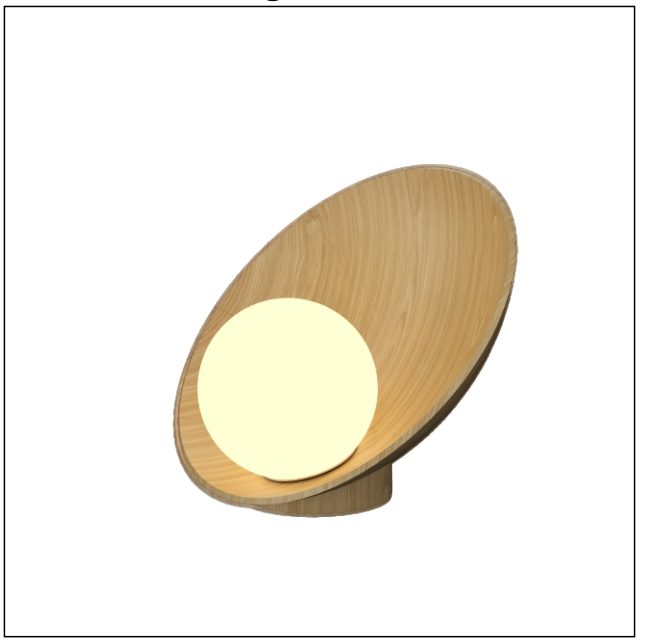

Technical Drawing

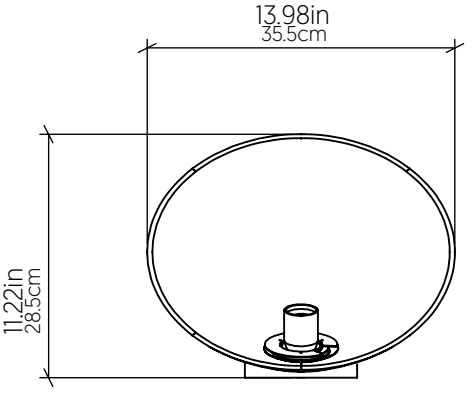

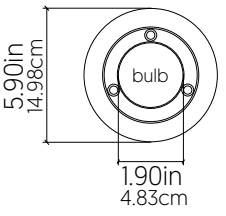

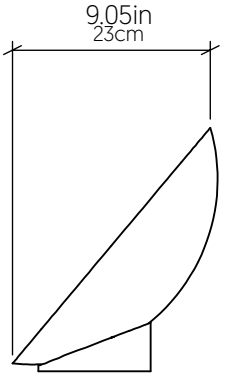

Photometric Graph

Coming Soon!

Standards

c UL us

DAMP LOCATION