ACCORD LIGHTING

Specifier: _____ Date: _____

Project name: _____

Project location: _____

# 7048 (E-26)

| | |
|---|---|
| Name: | Facet Accord Table Lamp 7048 |
| Collection: | Facet |
| Application: | Table Lamp |
| Construction: | Natural Wood Veneer, MDF and Stainless Steel |

## Specifications

| | |
|---|---|
| Light Source: | 1X 25W 120V-240V E26 (medium base) Light Bulbs not Included |
| Color Temperature: | Lamp dependent |
| CRI: | Lamp dependent |
| Delivered Lumens: | Lamp dependent |
| Total Power: | Lamp dependent |
| Input Voltage: | 120V - 240V |
| Input Frequency: | 60 Hz |
| Canopy Dimension | N/A |
| Height Adjustment Limit: | N/A |
| Weight: | 1.8kg/3.97lbs |
| Cable Lenght: | 2.80mts/9.18' |

## Fixture Image



## Technical Drawing

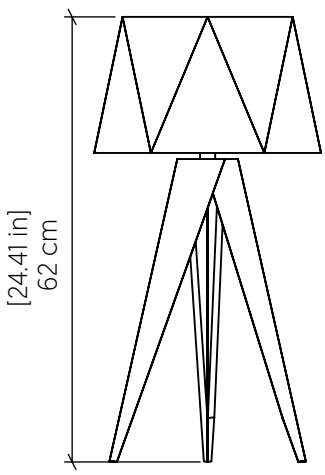


## Photometric Graph

Coming Soon!

## Standards

c UL us

DAMP LOCATION

