ACCORD LIGHTING

Specifier: _____ Date: _____

Project name: _____

Project location: _____

3061 (E-26)

Name:	Balloon Accord Floor Lamp 3061
Collection:	Balloon
Application:	Floor Lamp
Construction:	Natural Wood Veneer, MDF Cotton Shade

Specifications

Light Source:	1X 25W 120V-240V E26 (medium base) Light Bulbs not Included
Color Temperature:	Lamp dependent
CRI:	Lamp dependent
Delivered Lumens:	Lamp dependent
Total Power:	Lamp dependent
Input Voltage:	120V - 240V
Input Frequency:	60 Hz
Canopy Dimension	N/A
Weight:	N/A
Standard:	Interior in Maple

Fixture Image



Technical Drawing

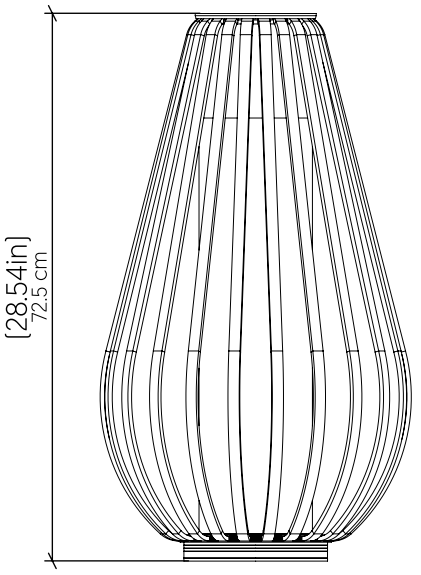

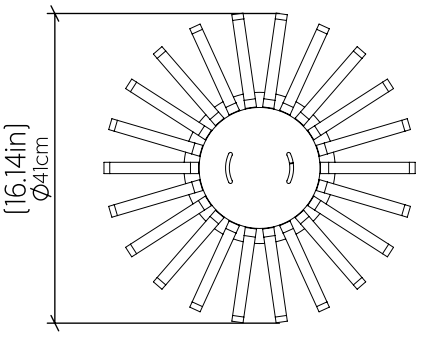

Photometric Graph

Coming Soon!

Standards

c UL us

DAMP LOCATION