ACCORD LIGHTING

Specifier: _____ Date: _____

Project name: _____

Project location: _____

3035 (E-26)

Name: Floor Lamp Accord Stecche Di Legno 3035
Collection: Stecche Di Legno
Application: Floor Lamp
Construction: Natural Wood Veneer, MDF, Leather and Cotton Shade

Specifications

Light Source:	1X 25W 120v-240v E26 (medium base) Light Bulbs not Included
Color Temperature:	Lamp dependent
CRI:	Lamp dependent
Delivered Lumens:	Lamp dependent
Total Power:	Lamp dependent
Input Voltage:	120V - 240V
Input Frequency:	60 Hz
Canopy Dimension	N/A
Height Adjustment Limit:	N/A
Weight:	3.37kg/7.43lbs
Cable Lenght:	2.80mts/9.18'

Fixture Image



Technical Drawing

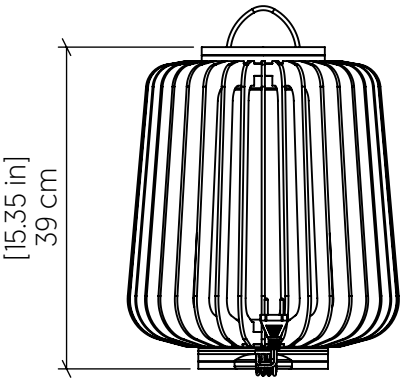

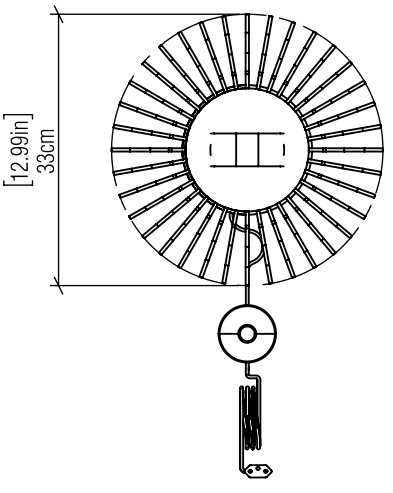

Photometric Graph

Coming Soon!

Standards

c UL us

DAMP LOCATION