ACCORD LIGHTING

Specifier: _____ Date:

Project name: _____

Project location: _____

1548LED (LED)

Name:	Petra Accord Pendant 1548 LED
Collection:	Petra
Application:	Pendant
Construction:	Natural Wood Venner, MDF, Stone and Acrylic

Specifications

Light Source:	Integrated LED Module
Driver Location	Canopy
Color Temperature:	3000K, 3500K or 4000K
Dimming Option:	0-10V, ELV/TRIAC
CRI:	90
Delivered Lumens:	2372lm
Delivered Lumen:	60W
Input Voltage:	120V - 277V
Input Frequency:	60 Hz
Canopy Dimension	N/A
Height Adjustment Limit:	10'
Weight:	N/A

Fixture Image

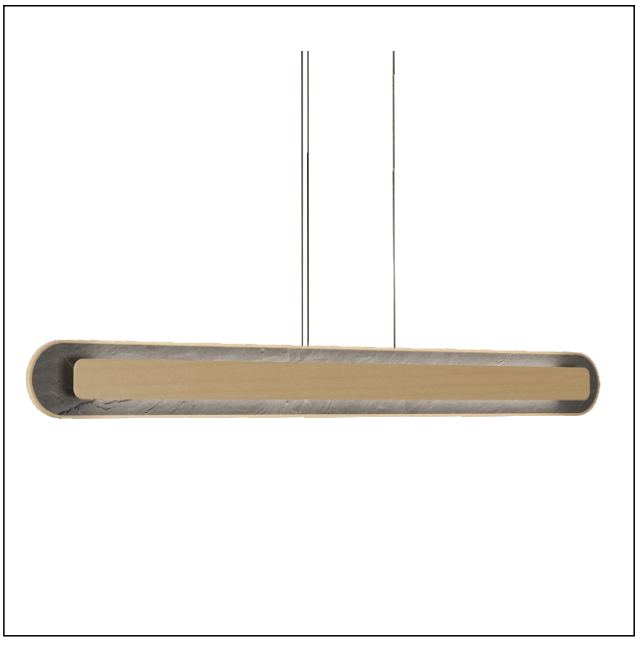

Technical Drawing

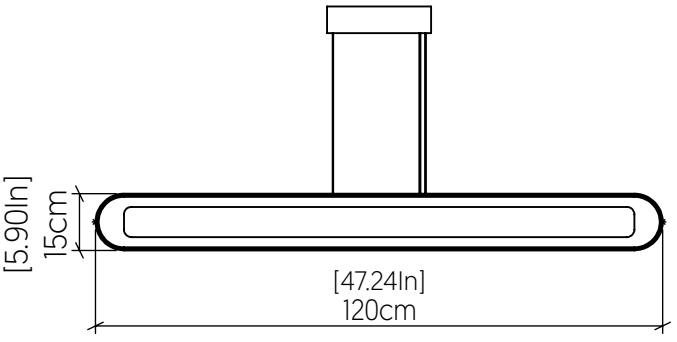

Photometric Graph

Coming Soon!

Standards

c UL us

DAMP LOCATION

