ACCORD LIGHTING

Specifier: _____ Date: _____

Project name: _____

Project location: _____

1446 (E-26)

Name:	Balance Accord Pendant 1446
Collection:	Balance
Application:	Pendant
Construction:	Natural Wood Venner, MDF and Carbon Steel

Specifications

Light Source:	4x E26 25W 120V-240V
Driver Location	N/A
Color Temperature:	Lamp Dependent
Dimming Option:	Lamp Dependent
CRI:	Lamp Dependent
Delivered Lumens:	Lamp Dependent
Total Power:	Lamp Dependent
Input Voltage:	120V - 240V
Input Frequency:	60 Hz
Canopy Dimension	H4cm Ø18cm / H1.57" Ø7.08"
Height Adjustment Limit:	N/A
Weight:	N/A
Standard:	Black Lacquer painted metal

Fixture Image



Technical Drawing

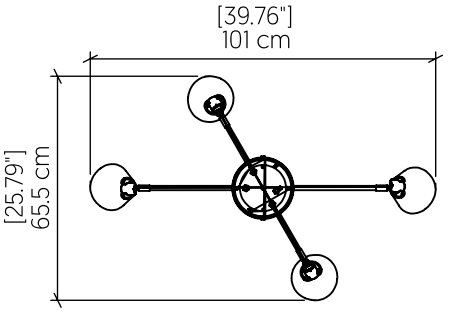

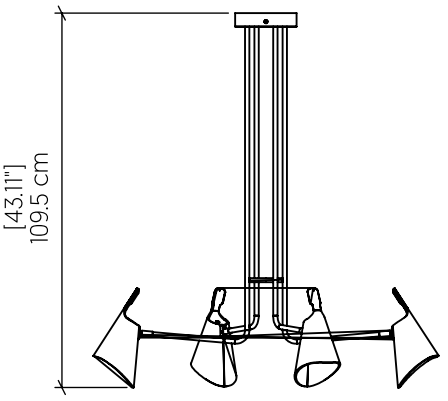

Photometric Graph

Coming Soon!

Standards

c UL us

DAMP LOCATION