ACCORD LIGHTING

Specifier: _____ Date: _____

Project name: _____

Project location: _____

1472LED (LED)

Name: Horizon Accord Pendant 1472LED
Collection: Horizon
Application: Pendant
Construction: Natural Wood Venner, MDF and Acrylic

Specifications

Light Source:	Integrated LED Tape
Driver Location	Canopy
Color Temperature:	3000K, 3500K or 4000K
Dimming Option:	0-10V, ELV/TRIAC
CRI:	90
Delivered Lumens:	4853 lm
Total Power:	83 W
Input Voltage:	120V - 277V
Input Frequency:	60 Hz
Canopy Dimension	N/A
Height Adjustment Limit:	10'
Weight:	N/A

Fixture Image



Technical Drawing

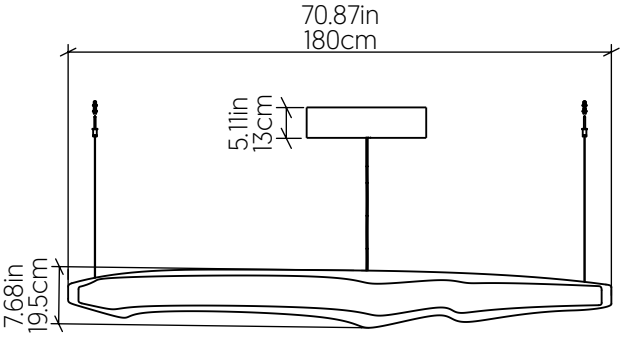

Photometric Graph

Coming Soon!

Standards

c UL us

DAMP LOCATION

