ACCORD LIGHTING

Specifier: _____ Date: _____

Project name: _____

Project location: _____

1359LED (LED)

Name:	Faceted Accord Pendant 1359 LED
Collection:	Facet
Application:	Pendant
Construction:	Natural Wood Venner, MDF and Acrylic

Specifications

Light Source:	Integrated LED Module
Driver Location	Canopy
Color Temperature:	3000K, 3500K or 4000K
Dimming Option:	0-10V OR ELV/TRIAC
CRI:	90
Delivered Lumens:	4044lm
Total Power:	69.1W
Input Voltage:	120V-277V
Input Frequency:	60 Hz
Canopy Dimension	CANOPY DIMENSION
Height Adjustment Limit:	10'
Weight:	WEIGHT

Fixture Image



Technical Drawing

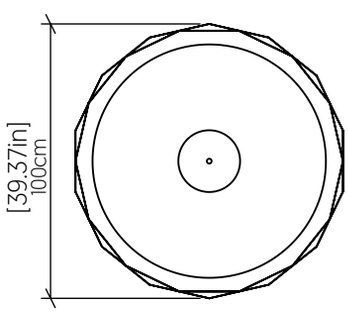

Photometric Graph

Coming Soon!

Standards

c UL us

DAMP LOCATION

