# LOI

RECESSED LUMINAIRE

**TYPE:**

**PROJECT NAME:**




SPECIFICATION SHEET

# LOI

RECESSED LUMINAIRE

**TYPE:**

**PROJECT NAME:**

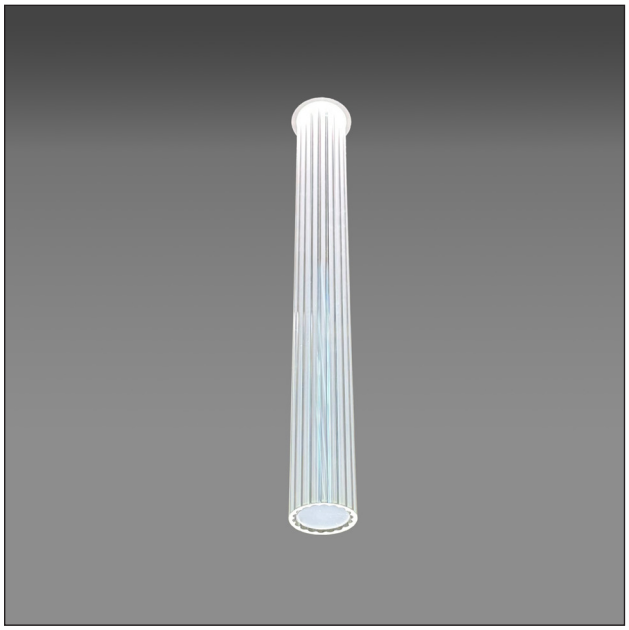

Designer
**Herve Descottes + Carlos Garcia + Esteban Varas**
**L'Observatorie International Lighting Design**

## Description

The LOI luminaire recessed is the result of a collaboration between L'Observatorie International + LUMINART exploring the function and aesthetics of light. Through the vision of Designers Herve Descottes, Carlos Garcia and Esteban Varas of L'Observatorie International and engineered and manufactured by LUMINART the LOI luminaire was created.

The Luminart LOI is a recessed lamp designed to be used as a single luminaire or grouped to form a cluster. The design results in a floating tube of light that emanates a warm glow. It combines a custom glass shade with an inner frosted tube with an integrated light engine. The entire glass tube floats within a round trimless assembly housing a single LED. The LED light engine has a specially developed lens that evenly distributes light downward into the glass inner frosted tube shade. The light source is invisible within the floating glass tube radiating a soft warm glow. The luminaire is dimmable in LTE or 0-10V.

The LOI is an example of crafted precision that combines the latest LED technology with an understanding of the qualities of light.

## ORDERING INFO

L1200. - - - - - - - - -

**Model**

**Driver**
- ◯ IT. Integral
- ◯ RM. Remote

**Diffuser Finish**
- ◯ ND. No Diffuser - Trim ring only
- ◯ IL. Ribbed glass with inner frosted tube
- ◯ FG. Frosted glass
- ◯ CG. Clear glass
- ◯ MDB. Metal diffuser, Black
- ◯ MDW. Metal diffuser, White
- ◯ MDC. Metal diffuser, Chrome
- ◯ MDS. Metal diffuser, Brass
- ◯ MDZ. Metal diffuser, Bronze
- ◯ MDP. Metal diffuser, Copper
- ◯ MDA. Metal diffuser, Aluminum

**Diffuser Length**
- ◯ 3"
- ◯ 6"
- ◯ 12"
- ◯ 18"
- ◯ 24"
- ◯ 30"

**Trim Ring Finish**
- ◯ 01. White
- ◯ 02. Black
- ◯ 03. Aluminum
- ◯ 04. Chrome
- ◯ 05. Gold
- ◯ 06. Copper
- ◯ 07. Bronze

**Wattage**
- ◯ 6W
- ◯ 8W
- ◯ 12W

**LED**
- ◯ 2200K
- ◯ 2400K
- ◯ 2700K
- ◯ 3000K
- ◯ 3500K
- ◯ 4000K

**Housing**
- ◯ RF. Retrofit
- ◯ NC. New construction with hanger bars

**Voltage**
- ◯ 120V
- ◯ 277V
- ◯ Universal 120-277V

**Dimming**
- ◯ LTE. (Leading/ Trailing Edge)
- ◯ 010. (0-10V)

Intertek

SPECIFICATION SHEET

# LOI

RECESSED LUMINAIRE

**TYPE:**

**PROJECT NAME:**

| | |
|---|---|
| **Source** | LED module |
| **Total Power** | 6W-12W |
| **Emission** | Diffused downlight |
| **Driver** | 200mA-350mA Integral & Remote - Suitable for all certified fully listed class 2 drivers |
| **Dimming** | Dimmable (LTE or 0-10V) |
| **Voltage** | 120V-277V |
| **Color temperature** | 2200K-4000K |
| **Materials** | Aluminum + Glass |
| **Trim Ring Finish** | 01 White, 02 Black, 03 Aluminum, 04 Chrome, 05 Gold, 06 Copper, 07 Bronze |
| **Diffuser** | Clear glass diffuser with inner tube or metal cylinder diffuser |

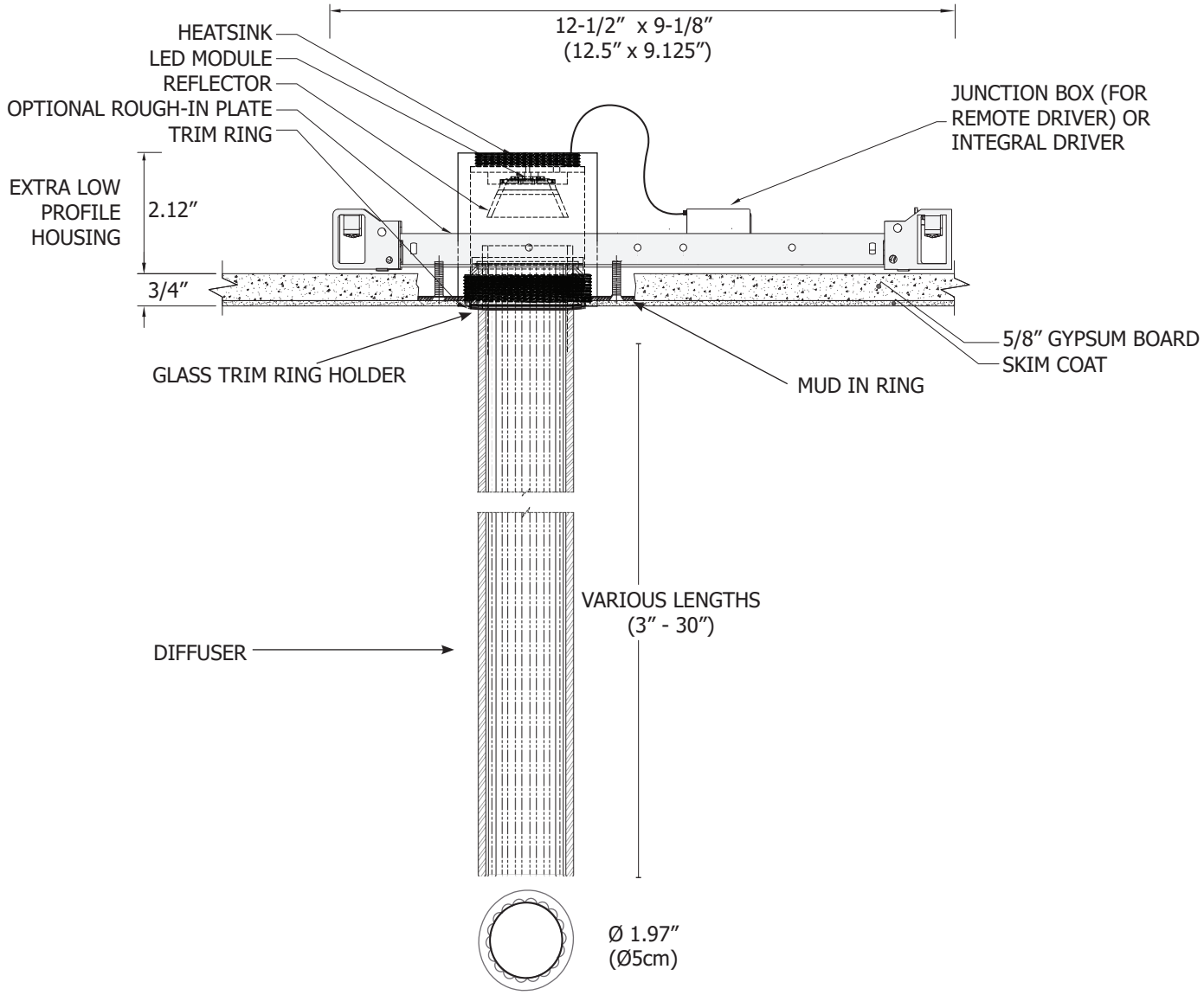


SPECIFICATION SHEET

# LOI

RECESSED LUMINAIRE

**TYPE:**

**PROJECT NAME:**

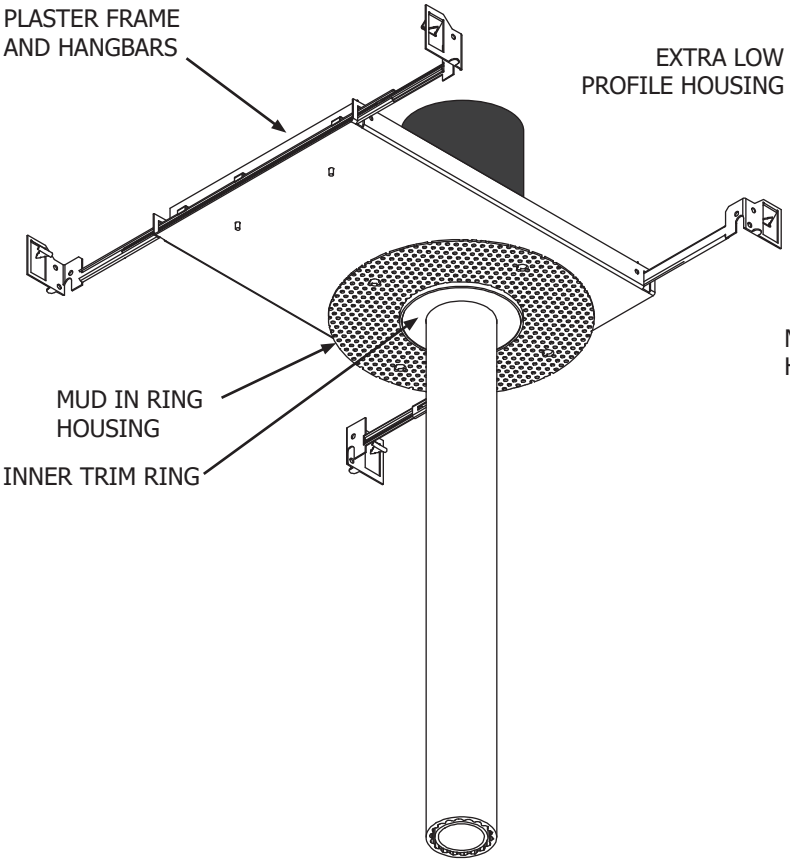


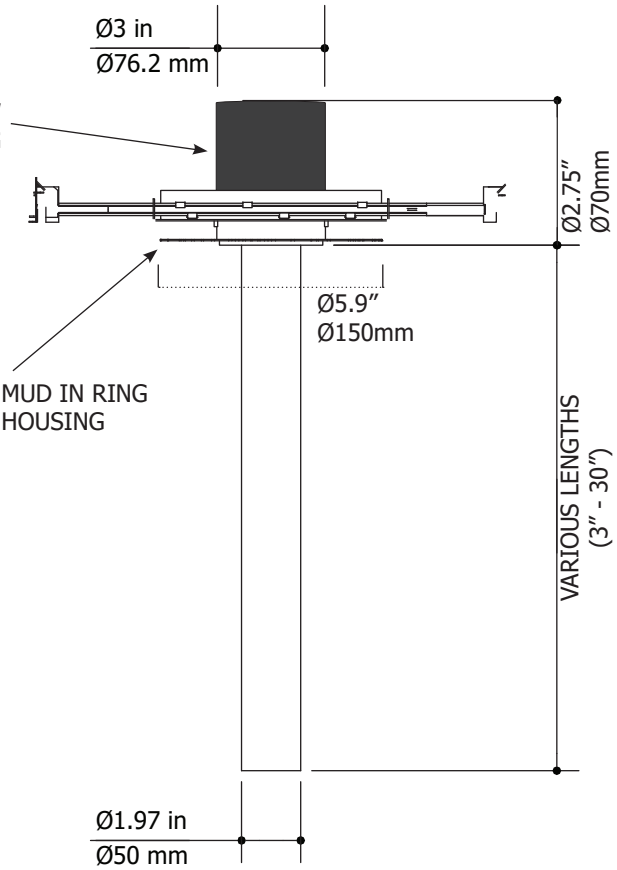


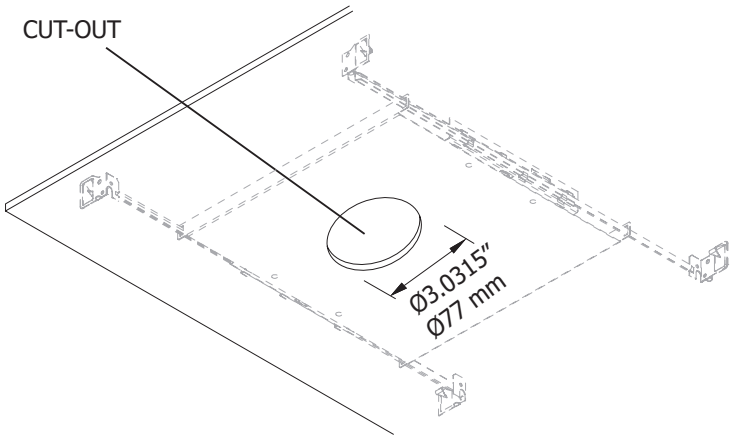


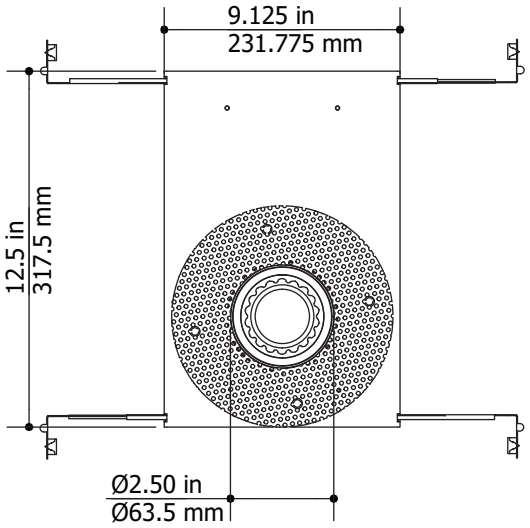


SPECIFICATION SHEET