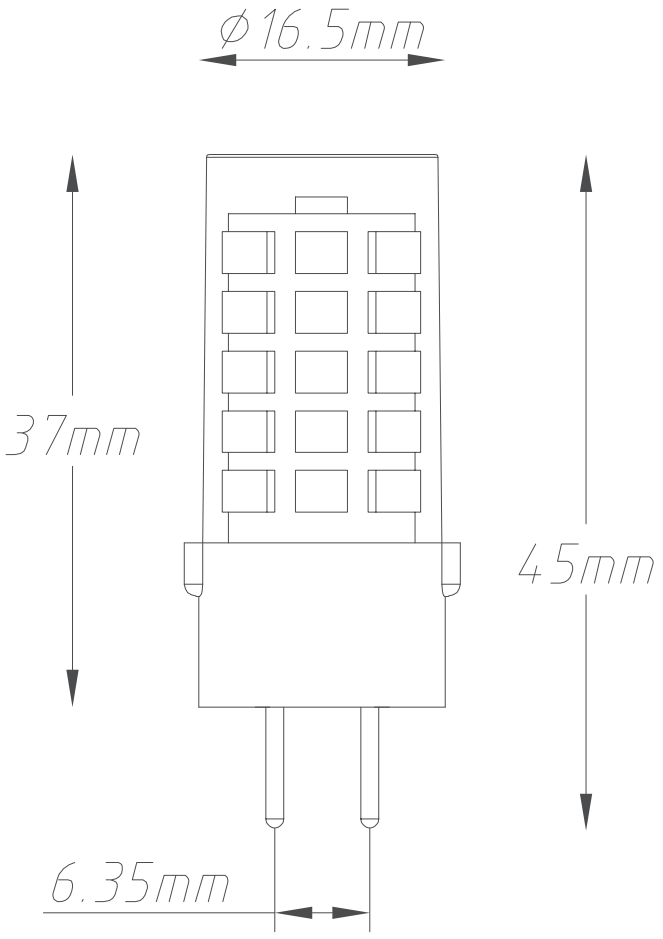

S12322-S12323

S45GY6.35 4.5W