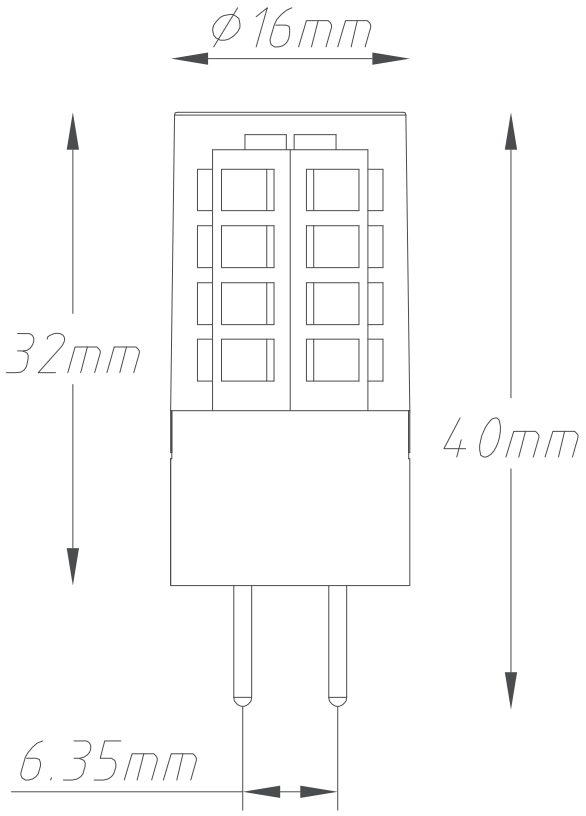

S12316-S12317

S27GY6.35 3W