Project Name _____ **Qty** _____

Type _____ **Catalog / Part Number** _____

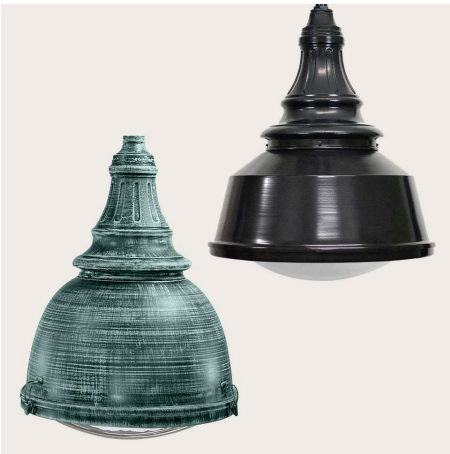

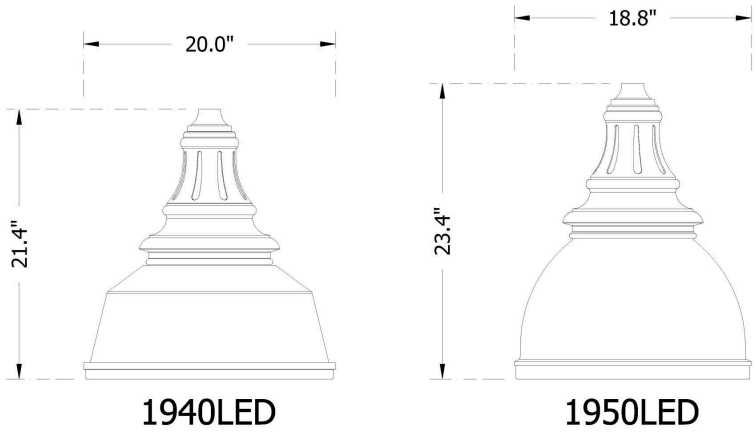

Certifications

Description

The 1940LED Glenview and 1950LED Mission Trails are decorative pendant luminaires which consist of decorative cast aluminum fitters, and heavy gauge spun aluminum shades with integral lens frames.

EPA: .83 (ft²) | WEIGHT: 37 LBS

Mounting Configuration


Wall Mount


1 Arm Mount


2 Arm Mount @ 180°


2 Arm Mount @ 90°


3 Arms @ 120°


3 Arms @ 90°


4 Arms @ 90°


1Arm MidMount


2Arm MidMount @180


Stem Hung


Chain Hung


Catenary

Features

Mounting Configuration	**1W:** Wall Mount **1A:** 1 Arm Mount **2A:** 2 Arm Mount @ 180° **2A90:** 2 Arm Mount @ 90° **3A:** 3 Arms @ 120° **3A90:** 3 Arms @ 90° **4A:** 4 Arms @ 90° **1AM:** 1Arm MidMount **2AM:** 2Arm MidMount @180 **SH44:** Stem Hung **CH44:** Chain Hung **CAT:** Catenary
Fixture	**1940LED:** Glenview **1950LED:** Mission Trails
Lens	**FG:** Flat Glass **SV1:** Flat SoftVue™ Light Diffused Acrylic **SV2:** Flat SoftVue™ Moderate Diffused Acrylic **FFG:** Frosted Flat Glass **SG:** Sag Glass **FSG:** Frosted Sag Glass
Hangstraight	**HSHB:** Standard Horizontal Hangstraight, Ball Finial **HSHS:** Standard Horizontal Hangstraight, Spike Finial **HSHN:** Standard Horizontal Hangstraight, No Finial **EZ:** Vertical Hangstraight, Large, "EZ" Mount
Optional Control Receptacle	**R7:** 7-Pin control receptacle only

Sternberg reserves the right to make changes to this product at any time without prior notice and such modification shall be effective immediately.
2026.10.22 Copyright © 2026 Sternberg

Finish


Black Textured


White Textured


Park Green Textured


Arch Med Bronze Tex


Dark Bronze Textured


Verde Green


Swedish Iron


Old World Gray Tex


Old Iron


Rust


Weathered Brown


Cedar


Weathered Black


Two Tone


Custom Match

CCT - Color Temp (K)


2,700K


3,000K


3,500K


4,000K


5,000K

Distribution Type


Type 2


Type 3


Type 4


Type 5

Optional Control	**PE:** Twist-Lock Photocontrol (120V-277V) **PE4:** Twist-Lock Photocontrol (347V-480V) **SC:** Shorting Cap **PEC:** Electronic Button Photocontrol (120V-277V) **PEC4:** Electronic Button Photocontrol (480V)
Optional Fuse	**FHD:** Double Fuse and Holder
Optional House Side Shield	**HSS:** 120° House Side Shield
Optional Fixed Dimming Resistor Board	**FDRB:** Fixed Dimming Resistor Board
Finish	**BKT:** Black Textured **WHT:** White Textured **PGT:** Park Green Textured **ABZT:** Arch Med Bronze Tex **DBT:** Dark Bronze Textured **VG:** Verde Green **SI:** Swedish Iron **OWGT:** Old World Gray Tex **OI:** Old Iron **RT:** Rust **WBR:** Weathered Brown **CD:** Cedar **WBK:** Weathered Black **TT:** Two Tone **CM:** Custom Match

Light Source

LED	**1L:** 1 LED **2L:** 2 LEDs	
CCT - Color Temp (K)	**27:** 2,700K **35:** 3,500K **50:** 5,000K	**30:** 3,000K **40:** 4,000K
Distribution Type	**T2:** Type 2 **T4:** Type 4	**T3:** Type 3 **T5:** Type 5
Driver	**MDL06:** 120V-277V, 600mA **MDL08:** 120V-277V, 800mA **MDL09:** 120V-277V, 900mA **MDL10:** 120V-277V,1050mA **MDL12:** 120V-277V, 1200mA **MDL14:** 120V-277V, 1400mA	**MDH06:** 347V-480V, 600mA **MDH08:** 347V-480V, 800mA **MDH09:** 347V-480V, 900mA **MDH10:** 347V-480V,1050mA **MDH12:** 347V-480V,1200mA **MDH14:** 347V-480V,1400mA

Important

Virtual Patent Marking Notice

This website (https://www.lmpg.com/patents-trademarks) is provided to satisfy the virtual patent marking provisions of applicable jurisdictions. Some products listed may be covered by additional patents not referenced here.

Sternberg reserves the right to make changes to this product at any time without prior notice and such modification shall be effective immediately.
2026.10.22 Copyright © 2026 Sternberg

How to Order

Mounting Configuration	Fixture	LED	CCT - Color Temp (K)	Distribution Type	Driver	Lens	Hangstraight
1W Wall Mount **1A** 1 Arm Mount **2A** 2 Arm Mount @ 180° **2A90** 2 Arm Mount @ 90° **3A** 3 Arms @ 120° [1] **3A90** 3 Arms @ 90° **4A** 4 Arms @ 90° **1AM** 1Arm MidMount **2AM** 2Arm MidMount @180 **SH44** Stem Hung **CH44** Chain Hung **CAT** Catenary [2]	**1940LED** Glenview **1950LED** Mission Trails	**1L** 1 LED **2L** 2 LEDs	**27** 2,700K **30** 3,000K **35** 3,500K **40** 4,000K **50** 5,000K	**T2** Type 2 **T3** Type 3 **T4** Type 4 **T5** Type 5	**MDL06** 120V-277V, 600mA [3] **MDH06** 347V-480V, 600mA [3] **MDL08** 120V-277V, 800mA [4] **MDH08** 347V-480V, 800mA [4] **MDL09** 120V-277V, 900mA [3] **MDH09** 347V-480V, 900mA [3] **MDL10** 120V-277V,1050mA [4] **MDH10** 347V-480V,1050mA [4] **MDL12** 120V-277V, 1200mA **MDH12** 347V-480V,1200mA **MDL14** 120V-277V, 1400mA [4] **MDH14** 347V-480V,1400mA [4]	**FG** Flat Glass **SV1** SoftVue™ Light Diffused **SV2** SoftVue™ Moderate Diffused **FFG** Frosted Flat Glass **SG** Sag Glass **FSG** Frosted Sag Glass	**HSHB** Standard Horizontal Hangstraight, Ball Finial **HSHS** Standard Horizontal Hangstraight, Spike Finial **HSHN** Standard Horizontal Hangstraight, No Finial **EZ** Vertical Hangstraight, Large, "EZ" Mount [5]

Notes:

1. Only available with a round profile pole.
2. Requires EZ hang-straight.
3. For 1L only.
4. For 2L only.
5. Not for use with R7.

Sternberg reserves the right to make changes to this product at any time without prior notice and such modification shall be effective immediately.
2026.10.22 Copyright © 2026 Sternberg

How to Order

Optional Control Receptacle [6] [7] [8] [9]	Optional Control	Optional Fuse [11]	Optional House Side Shield [12]	Optional Fixed Dimming Resistor Board [5]	Finish
R7 7-Pin control receptacle only	**PE** Twist-Lock Photocontrol (120V-277V) [10] **PE4** Twist-Lock Photocontrol (347V-480V) [10] **SC** Shorting Cap [10] **PEC** Button Photo Control (120V-277V) [5] **PEC4** Button Photocontrol (480V) [5]	**FHD** Double Fuse and Holder	**HSS** 120° House Side Shield	**FDRB** Fixed Dimming Resistor Board	**BKT** Black Textured [13] **WHT** White Textured [13] **PGT** Park Green Textured [13] **ABZT** Arch Med Bronze Tex [13] **DBT** Dark Bronze Textured [13] **VG** Verde Green **SI** Swedish Iron **OWGT** Old World Gray Tex **OI** Old Iron [14] **RT** Rust [14] **WBR** Weathered Brown [14] **CD** Cedar [14] **WBK** Weathered Black [14] **TT** Two Tone [14] **CM** Custom Match [14]

Notes:

5. Not for use with R7.
6. See specifications section for more info on compatibility with wireless controllers
7. Not for use with STEM, CHAIN, CAT, or EZ mounting style.
8. Not for use with FDRB.
9. Only available with HORIZONTAL hangstraight.
10. Requires control receptacle.
11. Ships loose for installation in base.
12. Not for use with T5 optic.
13. Smooth finishes are available upon request.
14. Custom colors require upcharge.

Sternberg reserves the right to make changes to this product at any time without prior notice and such modification shall be effective immediately.
2026.10.22 Copyright © 2026 Sternberg

Specifications

Recommended Arms	This luminaire pairs well with the variety of arms: **91W, R2, OA and CA** An assortment of alternate arms are available to suit any application. Build your assembly in Genesis to review different arm styles.
Hang-Straight	A hang-straight transition is required for most hanging mounting configurations. The Standard **(HSHx)** is an aluminum ball and swivel horizontal hang-straight. Available with a spike **(S)**, a ball **(B)**, or no finial **(N)**. The hang-straight slips a **4" long by 2-3/8" OD** horizontal tenon. The **(EZ)** is a cast stainless steel ball and swivel vertical hang-straight. The special 2-part design allows for easy installation. It is factory installed under an arm and on the fixture.
Catenary Mount	The Catenary mount option includes a cast aluminum span wire clamp, which accommodates cables **1/4"-5/8"** in diameter. Below the clamp is a decorative cast aluminum wire box and cover which transitions to the **EZ** vertical Hangstraight for fixture attachment. **Aircraft Cable by others.**
Hardware	Includes Stainless steel hardware. Most finishes will include hardware with a Black Oxide conversion coating. Light finishes will get non-color coated hardware **(Whites and Silvers)**
Lens	Optional glare reducing SoftVue™ lens provides optimal visual comfort. Materials include Glass and Acrylic, with Flat or Sag profiles.
Serviceability	Easy access to service the lens in the field.
UL Listing	UL listed per UL1598 and CSA C22.2 No. 250.0 for the United States and Canada. Suitable for Wet Locations operating in an ambient temperature of up to 40°C (105°F)
Electronic Driver	The LED driver is UL recognized and will be securely mounted inside the fixture, for optimized performance and longevity. It will be supplied with a quick-disconnect electrical connector on the power supply, providing easy power connections for fixture installation and maintenance. It will have DC voltage output and be a constant current design. It runs at 50/60HZ and will have overload, overheat, and short circuit protection. It will be supplied with a supplemental line-ground, line-neutral and neutral-ground electrical surge protection in accordance with IEEE/ANSI C62.41.2 guidelines. It will be a high efficiency driver with a THD less than 20% and a high-power factor greater than .9. It will be dimming capable using a 0-10V signal, consult factory for more information.
NightSky® Friendly	Dark sky design properties with a U0 BUG rating for specific configurations.
IP Rating	IP66 rated luminaire for enhanced protection against dust and water intrusion.
Finish	Our 6 Stage Polyester Powder coat paint system offers a beautiful high-end finish that holds up to even the most extreme environments. Each part is inspected for quality and consistency before being released for shipment. Our system exceeds AAMA 2604, AAMA 2605, ASTM D523 and ASTM D4214 requirements.
Traditional Finish	Traditional paint finishes are available in Sternberg Lighting's Traditional product line. A range of colors help accent the decorative elements on the product. Finishes are available in textured or smooth. Available finishes include: **Black, White, Park Green, Architectural Medium Bronze and Dark Bronze**
Sternberg Select Finish	The Sternberg Select antique-inspired palette adds a touch of vintage elegance to modern applications. **Old World Gray Textured** is a 1 part powder coat with metallic flakes. **Verde Green and Swedish Iron** is a 2 part finish that includes a powder coat base coat with a hand applied antique top coat. The top coat is unique to each application and changes over time.
Custom Finish	Custom finishes are offered to adapt to any application. **Rust, Weathered Brown and Cedar** are special 1 part powder coat finishes with a distinctive look. **Old Iron and Weathered Black** are 2 part finishes that includes a powder coat base coat with a hand applied antique top coat. The top coat is unique to each application and changes over time. **Two-Tone and Custom Match** options available to blend Sternberg product with the site, consult factory for information.
Warranty	7-year limited warranty. See Website for Terms and Conditions.

Sternberg reserves the right to make changes to this product at any time without prior notice and such modification shall be effective immediately.
2026.10.22 Copyright © 2026 Sternberg

LEDs	The LEDs in this system will be fully shielded in a direct downward position to maximize efficiency. The luminaire shall use high output, high brightness LEDs, consisting of a two piece assembly complete with Chip on Board (COB) LED component and COB holder frame. The LEDs shall be 100% recyclable; not contain lead, mercury or any other hazardous substances and shall be RoHS compliant. Lumen maintenance shall be determined in accordance with IESNA TM-21, based on LED manufacturer LM-80 test data of no less than 6,000 hours and in-situ testing of the luminaire by an NVLAP accredited Energy Efficient Lighting Products lab. The high performance white LED's will have a predicted lumen depreciation of approximately 100,000 hours with greater than 70% of initial output. The High Brightness, High Output LEDs shall be 4000K (2700K, 3000K, 3500K or 5000K option) correlated color temperature (CCT). Photometrics comply with LM79 testing standards. **CCT Lumen Derate Values from 4,000K (70+ CRI)** 2,700K (80+ CRI)=**.87** 3,000K (70+ CRI)=**.99** 3,500K (80+ CRI)=**.92** 5,000K (70+ CRI)=**.99** **Consult factory for custom correlated color temperature (CCT) or color rendering index (CRI).**
Optics	The luminaire shall be provided with individual, refractor type optics applied to each LED. The luminaire shall provide Type ___ (2, 3, 4 or 5) light distribution per the IESNA classifications. Testing shall be done in accordance with IESNA LM-79.
Backlight Optical Control	**External House Side Shield (HSS):** An optional external 120° House Side Shield helps control backlight. Spun aluminum panel painted to match fixture.
Fixed Dimming Resistor Board (FDRB)	Optional numbered 10-step selector switch allows for fine adjustment of the light levels in the field, repeatable from location to location. Offers dimming from 25% to 100% of the original output. Enclosure is composite material, sealed to protect components for the life of the product.
Photocontrols	**Button Photocell:** The photocontrol shall be mounted on the fixture and pre-wired to driver. The electronic button type photocontrol is instant on and will turn on at 1.5 footcandles and will turn off at 2-3 footcandles. See pole spec sheet for pole mounted version. **Twist-Lock Style (Hangstraight Mount):** The photocontrol shall be mounted externally on the hangstraight and pre-wired to driver. The twist lock type photocontrol is instant on with a 3-6 second turn off, and shall turn on at 1.5 footcandles with a turn-off at 2-3 footcandles. If an **R7** is specified alongside a **BALL** or **SPIKE** style finial on hang-straight, a decorative cap (with window) is included to cover a **STANDARD** photocell. Use the **NO FINIAL** hangstraight option if the **R7** is used with a **WIRELESS CONTROLLER** .

Lumen Chart(s)

Tested with FG lens

Model #	T2 DELIVERED LUMENS	BUG	EFFICACY (LPW)	T3 DELIVERED LUMENS	BUG	EFFICACY (LPW)	T4 DELIVERED LUMENS	BUG	EFFICACY (LPW)	T5 DELIVERED LUMENS	BUG	EFFICACY (LPW)	WATTAGE
2L40T_-MD_14	17445	B3U0G3	111.8	17370	B3U0G3	111.3	17580	B3U0G2	112.7	18050	B4U0G2	115.7	156
2L30T_-MD_14	17000	B3U0G3	109.0	16925	B3U0G3	108.5	17130	B3U0G2	109.8	17590	B4U0G2	112.8	156
2L27T_-MD_14	15445	B3U0G3	99.0	15380	B3U0G3	98.6	15565	B3U0G2	99.8	15980	B4U0G2	102.4	156
2L40T_-MD_12	15370	B3U0G3	115.6	15275	B3U0G3	114.8	15505	B3U0G2	116.6	15880	B4U0G2	119.4	133
2L30T_-MD_12	14980	B3U0G3	112.6	14885	B3U0G3	111.9	15110	B3U0G2	113.6	15475	B4U0G2	116.4	133
2L27T_-MD_12	13610	B3U0G3	102.3	13525	B3U0G3	101.7	13725	B3U0G2	103.2	14060	B4U0G2	105.7	133
2L40T_-MD_10	13130	B3U0G3	118.3	13045	B3U0G3	117.5	13230	B3U0G2	119.2	13560	B3U0G2	122.2	111
2L30T_-MD_10	12795	B3U0G3	115.3	12715	B3U0G3	114.5	12895	B3U0G2	116.2	13215	B3U0G2	119.1	111
2L27T_-MD_10	11625	B3U0G3	104.7	11550	B3U0G3	104.1	11715	B3U0G2	105.5	12005	B3U0G2	108.2	111
2L40T_-MD_08	10700	B2U0G2	121.6	10655	B2U0G2	121.1	10805	B2U0G2	122.8	11065	B3U0G2	125.7	88
2L30T_-MD_08	10425	B2U0G2	118.5	10385	B2U0G2	118.0	10530	B2U0G2	119.7	10785	B3U0G2	122.6	88
2L27T_-MD_08	9475	B2U0G2	107.7	9435	B2U0G2	107.2	9565	B2U0G2	108.7	9795	B3U0G2	111.3	88
1L40T_-MD_12	7880	B2U0G2	112.6	7825	B2U0G2	111.8	7850	B2U0G1	112.1	8170	B3U0G1	116.7	70
1L30T_-MD_12	7680	B2U0G2	109.7	7625	B2U0G2	108.9	7650	B2U0G1	109.3	7960	B3U0G1	113.7	70
1L27T_-MD_12	6975	B2U0G2	99.6	6930	B2U0G2	99.0	6950	B2U0G1	99.3	7235	B3U0G1	103.4	70
1L40T_-MD_09	6400	B2U0G2	118.5	6345	B2U0G2	117.5	6370	B2U0G1	118.0	6630	B3U0G1	122.8	54
1L30T_-MD_09	6235	B2U0G2	115.5	6185	B2U0G2	114.5	6210	B2U0G1	115.0	6460	B3U0G1	119.6	54
1L27T_-MD_09	5665	B2U0G2	104.9	5620	B2U0G2	104.1	5640	B2U0G1	104.4	5870	B3U0G1	108.7	54
1L40T_-MD_06	4350	B1U0G1	120.8	4315	B1U0G1	119.9	4330	B1U0G1	120.3	4505	B2U0G1	125.1	36
1L30T_-MD_06	4240	B1U0G1	117.8	4205	B1U0G1	116.8	4220	B1U0G1	117.2	4390	B2U0G1	121.9	36
1L27T_-MD_06	3850	B1U0G1	106.9	3820	B1U0G1	106.1	3835	B1U0G1	106.5	3990	B2U0G1	110.8	36

Sternberg reserves the right to make changes to this product at any time without prior notice and such modification shall be effective immediately.
2026.10.22 Copyright © 2026 Sternberg

Dimensions

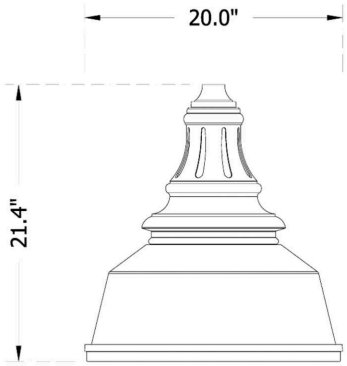

Glenview **(1940LED)**

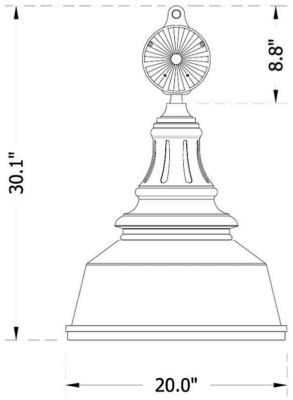

Catenary Mount **(CAT-1940LED)**

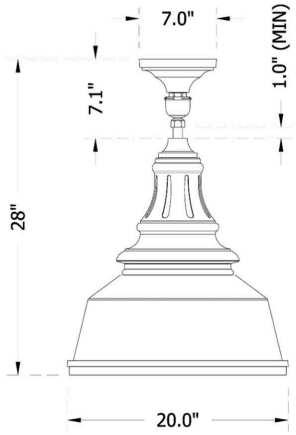

Stem Hung **(SH44-1940LED)**

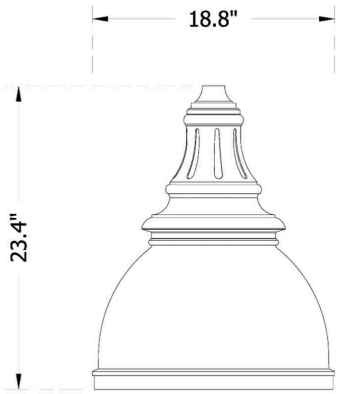

Mission Trails **(1950LED)**

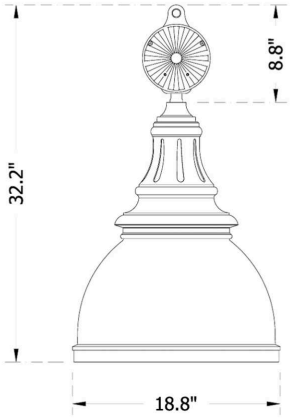

Catenary Mount **(CAT-1950LED)**

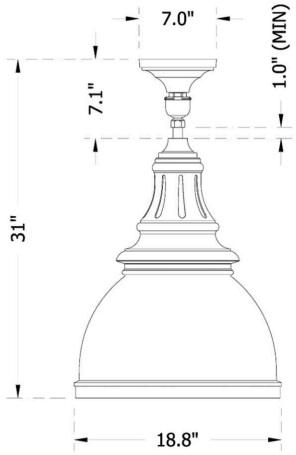

Stem Hung **(SH44-1950LED)**

Hangstraight

Horizontal Hang-straights slip fit 4" long by 2-3/8" OD horizontal tenon



Standard Horizontal Hangstraight, Spike Finial **(HSHS)**



Standard Horizontal Hangstraight, Ball Finial **(HSHB)**



Standard Horizontal Hangstraight, No Finial **(HSHN)**



"EZ" Vertical hangstraight **(EZ)**

Sternberg reserves the right to make changes to this product at any time without prior notice and such modification shall be effective immediately.
2026.10.22 Copyright © 2026 Sternberg

Options



Button Photocell **(PEC)**



Fixed Dimming Resistor Board **(FDRB)**



Double Fuse Holder & (2) 3A Fuses **(FHD)**



House Side Shield **(HSS)**

Recommended Arms

An assortment of alternate arms are also available



(91W) Arm



(R2) Arm



(OA) Arm



(CA) Arm

Sternberg reserves the right to make changes to this product at any time without prior notice and such modification shall be effective immediately.
2026.10.22 Copyright © 2026 Sternberg