# ERCO Quintessence Directional luminaire



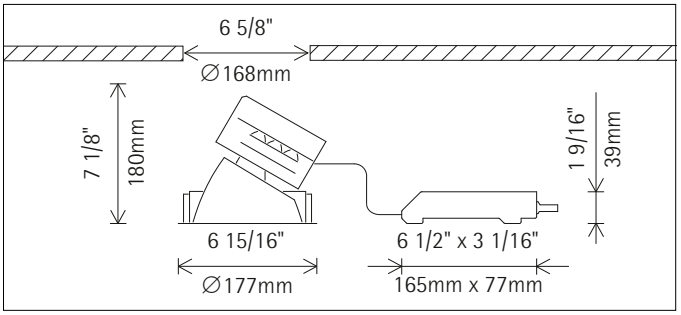


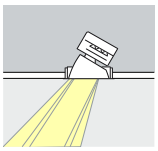

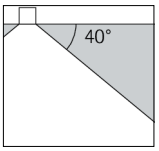


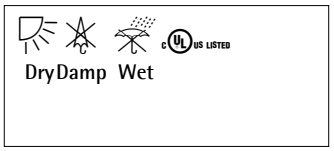


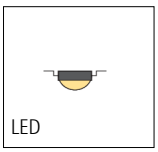


**48071.023 (B5000485)**
White (RAL9002)
LED module: 18.1W 1805lm 3000K warm white
0-10V dimmable
Version 3
Construction size 5
Covered mounting detail
Flush mounting is possible with accessory
Spherolit lens, flood

**Product description**
Housing: cast aluminum, designed as heat sink, with connection cable L 33 1/2" / 850mm. 0°-30° tilt. Fixing ring: polymer, black, rotatable through 360°. Lockable angles of tilt and rotation. Mounting ring: polymer, white (RAL9002). Fixing for ceiling thicknesses of 1/16"-1 3/16" / 1-30mm. 5 terminals. Control gear 120V, 60Hz, dimmable. LED module: high-power LEDs. Collimating lens made of optical polymer. Anti-dazzle cover: aluminum, black. Darklight reflector: polymer, aluminum vaporized, silver, specular. Cut-off angle 40° from horizontal. Type Non IC luminaire. Non fire rated installation only. Not suitable for fire rated ceilings. Insulation materials must be kept away from the luminaire by a minimum of 3". Thermally protected luminaire. Dimming with external dimmers possible (0-10V). Weight 2.87lbs / 1.30kg

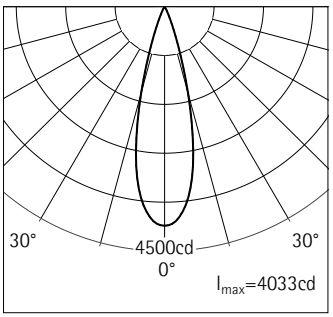


| h(ft) | E(fc) | D |
|---|---|---|
| | | 26.5° |
| 3'0" | 448 | 1'5" |
| 6'0" | 112 | 2'10" |
| 9'0" | 50 | 4'3" |
| 12'0" | 28 | 5'8" |
| 15'0" | 18 | 7'1" |

**Technical data**

| | |
|---|---|
| Luminous flux of the luminaire | 884lm |
| Connected load | 23.0W |
| Luminaire efficacy | 38lm/W |
| Color deviation | 1.5 SDCM |
| Color rendition index | CRI 97 |
| Lumen maintenance | L90/B10 >50000h<br>L90 >100000h |
| LED failure rate | 0.1% >50000h |
| TLA (Temporal Light Artefacts) | SVM ≤ 0.4; PstLM ≤ 1 |
| LMF | D |

For your regional contact in the ERCO Sales network click here
www.erco.com/contact

© ERCO GmbH 2026

Technical region: 120V/60Hz
We reserve the right to make technical and design changes.
Edition: 05.05.2026
Current version under
www.erco.com/48071.023

# Quintessence Directional luminaire

## Planning data

**Melanopic light effect**

| Art. no. | Spectrum | MR | MDER |
|---|---|---|---|
| 48071.023 (direct) | 3000K CRI 97 | 0.57 | 0.52 |

MR Melanopic factor (of luminous radiation) a_mel,v
MDER Melanopic Daylight Efficacy Ratio [gamma]_mel,v,D65

Multiplying the illuminance with the melanopic daylight efficacy ratio MDER gives the melanopic equivalent daylight illuminance MEDI. (MEDI Melanopic Equivalent Daylight Illuminance [lx] E_v,mel,D65 [lx]).

| Cleaning (a) | 1 | | | | 2 | | | | 3 | | | |
|---|---|---|---|---|---|---|---|---|---|---|---|---|
| Ambient conditions | P | C | N | D | P | C | N | D | P | C | N | D |
| LMF | 0.94 | 0.88 | 0.82 | 0.77 | 0.91 | 0.83 | 0.77 | 0.71 | 0.89 | 0.79 | 0.73 | 0.65 |

| Hours of operation (h) | 1000 | 5000 | 10000 | 20000 | 30000 | 40000 | 50000 |
|---|---|---|---|---|---|---|---|
| LLMF | 1.00 | 0.99 | 0.98 | 0.96 | 0.94 | 0.92 | 0.90 |
| LSF | 1 | 1 | 1 | 1 | 1 | 1 | 1 |

MF LMFxRSMFxLLMFxLSF
MF Maintenance Factor
LMF Luminaire Maintenance Factor
RSMF Room Surface Maintenance Factor
LLMF Lamp Lumens Maintenance Factor
LSF Lamp Survival Factor
P Room pure
C Room clean
N Room normal
D Room dirty

**Technical data based on international standards and directives**

| | |
|---|---|
| IEC 60598 | Luminaires – Parts 1 + 2: General requirements, particular requirements and tests |
| IEC 62031 | LED modules for general lighting – Safety specifications |
| IEC 62471 | Photobiological safety of lamps and lamp systems |
| UL 1598 | Luminaires |
| UL 1574 | Standard for Track Lighting Systems |
| UL 8750 | Standard for Light Emitting Diode (LED) Equipment for Use in Lighting Products |
| IES LM-79-08 | Electrical and Photometric Measurements of Solid-State Lighting Products |
| IES LM-80-08 | Measuring Lumen Maintenance of LED Light Sources |
| CIE 13 | Method of measuring and specifying color rendering properties of light sources |

All technical data are subject to industry standard tolerances.
See also www.erco.com/erco-led
For explanations of the symbols and abbreviations used and other general information, see www.erco.com/symbols

# Quintessence Directional luminaire

## Accessories

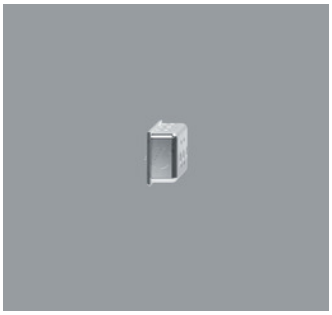

**88557.023**
Junction box
Housing: metal, galvanized.
The dimensions will allow fitting through ceiling aperture.
Flexible metal conduit to be ordered separately.

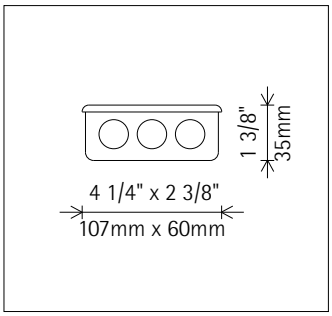


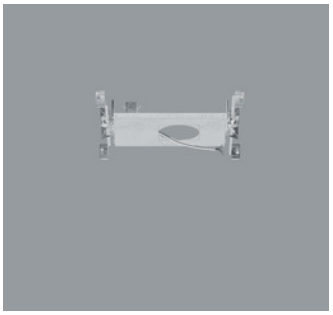

**82974.023**
Plaster frame
For flush mounting of luminaires with ceiling aperture ø172mm or 172x172mm.
Plate and integral junction box: metal, galvanized.
2 butterfly brackets and 2 hanger bars.
Hanger bars L 12 1/4"–24", height adjustable.
Flexible metal conduit L 19 11/16" / 500mm with straight snap in connectors (for 7/8" knockout) and 18AWG conductors.
Only to be used with mounting ring or mounting frame for flush mounting.
82937.000

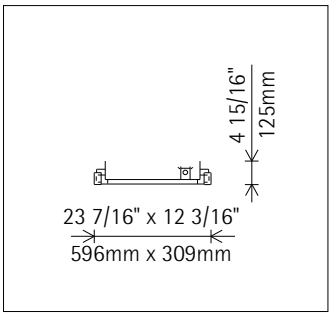


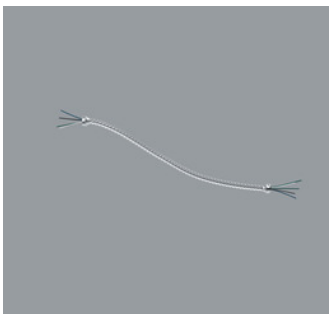

**88559.023**
Flexible metal conduit
L 19 11/16" / 500mm with straight snap in connectors (for 7/8" knockout) and 18AWG conductors.

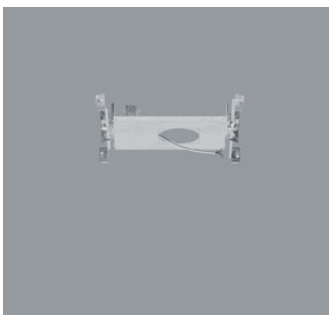

**82973.023**
Plaster frame
For covered mounting of luminaires with ceiling aperture ø168mm or 168x168mm.
Plate and integral junction box: metal, galvanized.
2 butterfly brackets and 2 hanger bars.
Hanger bars L 12 1/4"–24", height adjustable.
Flexible metal conduit L 19 11/16" / 500mm with straight snap in connectors (for 7/8" knockout) and 18AWG conductors.

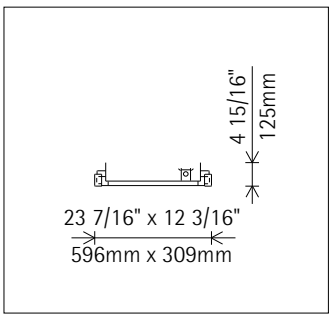


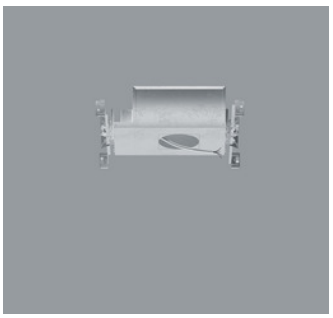

**82965.023**
Ultra airtight I.C. box
For covered mounting of luminaires with ceiling aperture ø 168mm or 168x168mm.
Housing and integral junction box: metal, galvanized.
2 butterfly brackets und 2 hanger bars.
Hanger bars L 12 1/4"–24", height adjustable.
Flexible metal conduit L 19 11/16" / 500mm with straight snap in connectors (for 7/8" knockout) and 18AWG conductors.
Weight 11.05lbs / 5.01kg

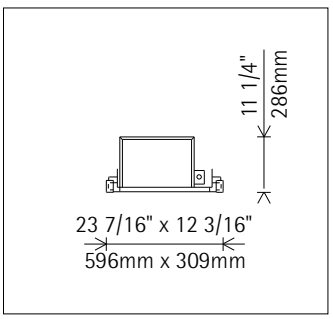

# Quintessence Directional luminaire

## Accessories

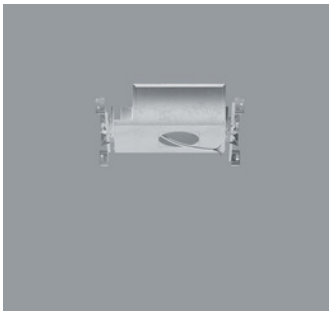

**82966.023**
Ultra airtight I.C. box
For flush mounting of luminaires with ceiling aperture ø 172mm or 172x172mm.
Housing and integral junction box: metal, galvanized.
2 butterfly brackets und 2 hanger bars.
Hanger bars L 12 1/4"–24", height adjustable.
Flexible metal conduit L 19 11/16" / 500mm with straight snap in connectors (for 7/8" knockout) and 18AWG conductors.
Only to be used with mounting ring or mounting frame for flush mounting.

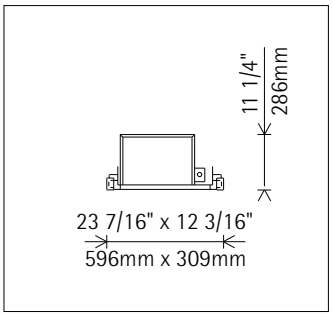


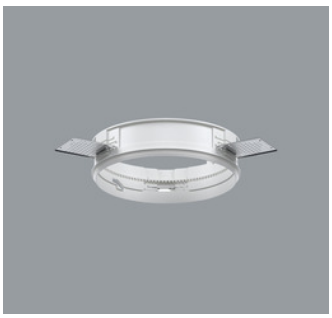

**82937.000**
Mounting ring
For flush mounting of recessed luminaires size 5.
Polymer, white (RAL9002). Fixing for ceiling thicknesses of 12.5-25mm.
The recess depth of the luminaire increases by 2mm.
Weight 0.26lbs / 0.12kg

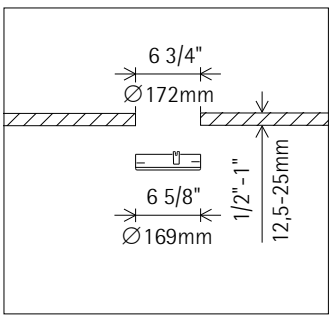




**83980.000**
Cover ring
Metal,white. For covering the gap where ceiling cut-outs are too big.
Inner and outer diameter to be specified when placing order.
Weight 0.88lbs / 0.40kg