VERSA STAR - Ceiling Recessed - Low Voltage - Lamp MR16 Gu5.3 - Square - Core Drill - Faceplate: Standard

(formerly Versa Star / CD-VQ-MR)

Configure

VS - CR - LOD - LAM16 - ___ - SQ - CD - FSD - ___ - ___ - ___ - WL00 - ___

01 02 03 04 05 06A 06B 06C 07 10A 10B 11 12

VERSA STAR - Ceiling Recessed - Low Voltage - Lamp MR16 Gu5.3 - Square - Core Drill - Faceplate: Standard - Standard

01 SERIES

VS - VERSA STAR

02 CATEGORY

CR - Ceiling Recessed

03 DRIVER

LOD - Low Voltage

04 LIGHT SOURCE (TYPE)

LAM16 - Lamp MR16 Gu5.3

05 MATERIAL

AL - Aluminum
BR - Brass
SS - Stainless Steel

06A SHAPE

SQ - Square

06B MOUNT

CD - Core Drill

06C STYLE

FSD - Faceplate: Standard

07 LIGHT SOURCE

00 - Not included
359 - 2700K CRI90 - 7.5W - 10°
361 - 2700K CRI90 - 7.5W - 25°
362 - 2700K CRI90 - 7.5W - 36°
363 - 3000K CRI90 - 7.5W - 10°
365 - 3000K CRI90 - 7.5W - 25°
366 - 3000K CRI90 - 7.5W - 36°

10A LENS

09 - Clear (Standard)
12 - Soft Focus
13 - Rectilinear

10B SHIELDING

00 - Not included (Standard)
11 - Honeycomb Baffle

11 WIRING LENGTH

WL00 - Standard

12 FINISH

Standard Finishes
BLP, **BZP**, **WHP**, **SAP**, **BLW**, **BZW**, **WHW**, **VER**
Premium Finishes
CMG, **RMG**, **AMG**, **TXF**, **BCM**, **BGE**, **WCP**, **OCP**, **HUG**, **ABP**, **BPP**, **SDS**, **WIR**, **CAP**, **CRM**, **AQW**, **NBP**
Other - RAL
RAL
Other - Custom Color
CUS
Brass Finishes
MAB, **POB**, **MIT**
Stainless Steel Finishes
MAS, **POS**

Compatible Mounting & Power Supply Option Types

(Configured separately. For the full list of compatible options, please use the "Order Separately" section located on **this product web page**.)



In-grade HP2



Transformer



Universal Power Module

Copyright © B-K Lighting, Inc. This document contains proprietary information of B-K Lighting, inc. and its receipt or possession does not convey any rights to reproduce, disclose its contents, or to manufacture, use or sell anything it may describe.

Technical information is subject to change at the discretion of B-K Lighting Inc. For the most current technical data, please refer to bklighting.com

VERSA STAR - Ceiling Recessed - Low Voltage - Lamp MR16 Gu5.3 - Square - Core Drill - Faceplate: Standard

(formerly Versa Star / CD-VQ-MR)

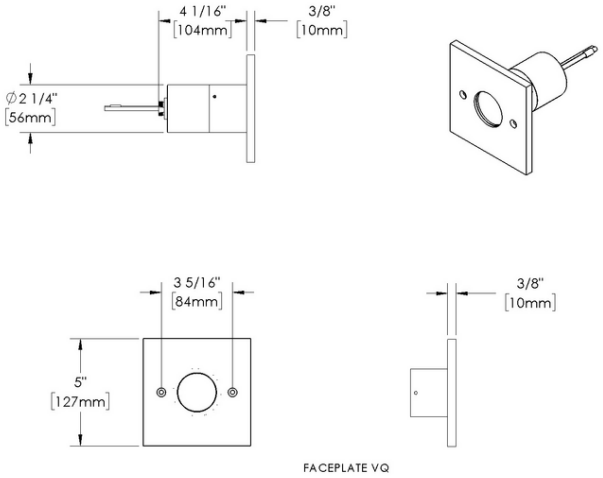

FACEPLATE VQ

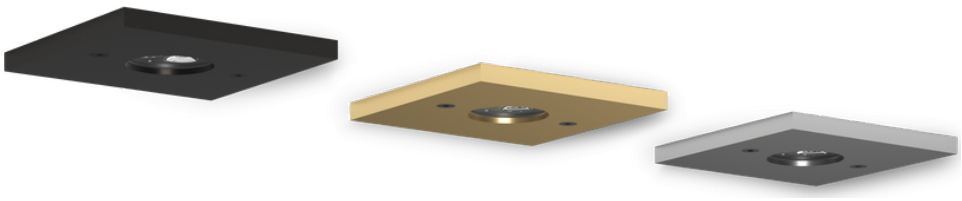

Finishes

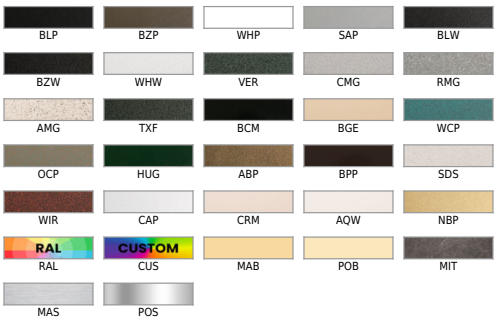

For more detailed information and visuals regarding our finishes, visit www.bklighting.com/finishes

B-K LIGHTING AMERICAN MADE + EMPLOYEE OWNED | 40429 Brickyard Drive, Madera, CA 93636 | +1 (559) 438-5800 | info@bklighting.com | bklighting.com

Copyright © B-K Lighting, Inc. This document contains proprietary information of B-K Lighting, inc. and its receipt or possession does not convey any rights to reproduce, disclose its contents, or to manufacture, use or sell anything it may describe.

Technical information is subject to change at the discretion of B-K Lighting Inc. For the most current technical data, please refer to bklighting.com

VERSA STAR - Ceiling Recessed - Low Voltage - Lamp MR16 Gu5.3 - Square - Core Drill - Faceplate: Standard

(formerly Versa Star / CD-VQ-MR)

IP66

Features



Anti-condensation vent allows moisture to exit the fixture but never enter in



Lens factory adhered to fixture cap providing hermetically sealed optical compartment



Secured with flush, countersunk tamper resistant hardware



Machined solid billet faceplate provides unmatched strength and durability



Manufactured in the USA with sustainable processes



Water-tight anti-siphon plug prevents moisture ingress from wireways



Easily replaceable modular components reduce waste and extend fixture life



Solid billet fixture body provides unmatched durability and heat management

Technical

Driver: Low Voltage

Light Source (Type): Lamp MR16 Gu5.3

Material: Aluminum, Brass, Stainless Steel

CCT (K): 2700, 3000

CRI: 90

Delivered Lumens (lm): Array

Beam Angle (°): 10, 25, 36

Control: ELV, MLV dimming capable via compatible remote transformers. See Mountings & Power Supplies section to order.

Shape: Square

Mount: Core Drill

Style: Faceplate: Standard

Input Voltage: 12V

Lens: Soft Focus, Clear (Standard), Rectilinear

Shielding: Not included (Standard), Honeycomb Baffle

Wiring Length: Standard

Finish: Standard Finishes, Premium Finishes, Other - RAL, Other - Custom Color, Brass Finishes, Stainless Steel Finishes

IP Rating: IP66 rated

Weight (lbs): 1.22 - 2.39

Body: Unibody design, with enclosed, water-proof wireway and integral heat sink, fully machined from solid billet.

Material Detail: Furnished in stainless steel (304)., Furnished in brass (360)., Furnished in copper-free aluminum (6061-T6).

Faceplate: Cast construction with machined finish. Countersunk holes provide for flush hardware mounting (by others).

Light Source Detail: SORAA® LED lamp provided with fixture. Fixture does NOT include lamp if "00 - Not included" is selected for "07 - Light Source". Halogen lamp compatible. NOT for use with traditional Halogen IR technology lamps.

Hardware: Mount with two (2) #10 fasteners as required (hardware not included). Length and type of mounting screws will vary with construction material.

Sealing: High temperature silicone 'O' Ring in fixture knuckle provides water-tight seal at joint.

Finish Detail: Powder coat or metal finish options available for brass material., Metal finish option only for stainless steel material., StarGuard, our 15-stage chromate-free process, cleans and conversion coats aluminum components prior to application of Class 'A' TGIC polyester powder coating. It is RoHS compliant.

Warranty: 5-year limited warranty.

Certification: Made in USA, UL Listed, Suitable for Wet Locations

WARNING: This is a low voltage product. Please check "Mountings With A Power Supply" or "Power Supplies" to order remote transformer separately.

Copyright © B-K Lighting, Inc. This document contains proprietary information of B-K Lighting, inc. and its receipt or possession does not convey any rights to reproduce, disclose its contents, or to manufacture, use or sell anything it may describe.

Technical information is subject to change at the discretion of B-K Lighting Inc. For the most current technical data, please refer to bklighting.com

VERSA STAR - Ceiling Recessed - Low Voltage - Lamp MR16 Gu5.3 - Square - Core Drill - Faceplate: Standard

(formerly Versa Star / CD-VQ-MR)

Light Source

Configure your product to display exact performance values

Light Source	Optic	Beam Angle	CCT (K)	CRI	Input Power (W)	Delivered Lumens (Lm)	CBCP
-	-	-	-	-	-	-	-

Without selecting your configuration

Light Source	Optic	Beam Angle	CCT (K)	CRI	Input Power (W)	Delivered Lumens (Lm)	CBCP
359	NSP - Narrow Spot	10°	2700	90	7.5		8000
361	NFL - Narrow Flood	25°	2700	90	7.5		3170
362	MFL - Medium Flood	36°	2700	90	7.5		1550
363	NSP - Narrow Spot	10°	3000	90	7.5		8400
365	NFL - Narrow Flood	25°	3000	90	7.5		3300
366	MFL - Medium Flood	36°	3000	90	7.5		1650

Copyright © B-K Lighting, Inc. This document contains proprietary information of B-K Lighting, inc. and its receipt or possession does not convey any rights to reproduce, disclose its contents, or to manufacture, use or sell anything it may describe.

Technical information is subject to change at the discretion of B-K Lighting Inc. For the most current technical data, please refer to bklighting.com