# 3.3”/4.5” ROUND WALL WASH DOWNLIGHT

TRIM

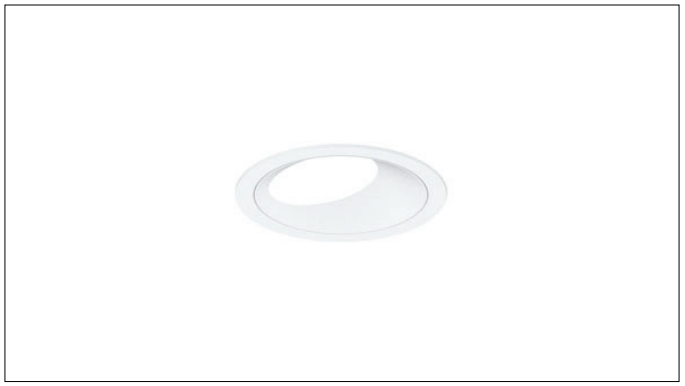

ⓘ THE IMAGES SHOWN ARE FOR ILLUSTRATION PURPOSES ONLY AND MAY NOT BE AN EXACT REPRESENTATION OF THE PRODUCT

## INCLUDED COMPONENTS

**RMD -** REMODEL

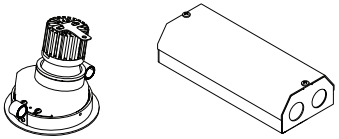

LED INSERT DRIVER ENCLOSURE

**NCF -** NEW CONSTRUCTION FRAME (FOR NEW CONSTRUCTION ONLY)

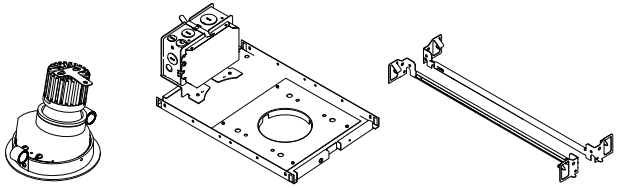

LED INSERT NEW CONSTRUCTION FRAME BAR HANGERS

**SH -** SHALLOW HOUSING (FOR NEW CONSTRUCTION ONLY)

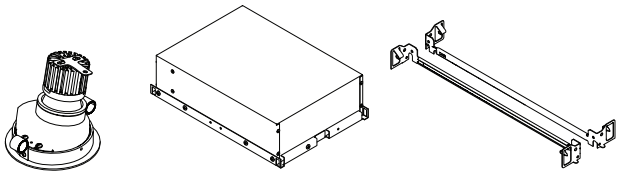

LED INSERT SHALLOW HOUSING BAR HANGERS

**NC/IC -** NEW CONSTRUCTION HOUSING (FOR NEW CONSTRUCTION ONLY)

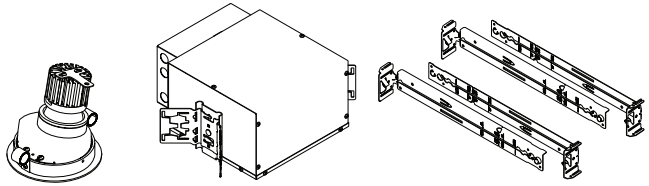

LED INSERT NEW CONSTRUCTION HOUSING BAR HANGERS (OPTIONAL)

| INSTRUCTION KEY | INFORMATION |
|---|---|
| ⚠ ADDITIONAL<br>ⓘ ATTENTION<br>POWER ON<br>POWER OFF | INSTALLATION SHOULD ONLY BE PERFORMED BY A CERTIFIED ELECTRICIAN<br>REFER TO LOCAL/NATIONAL CODES FOR PROPER INSTALLATION<br>FAILURE TO FOLLOW INSTALLATION INSTRUCTION MAY VOID THE WARRANTY<br>DO NOT TOUCH LEDS. LEDS MUST BE PROTECTED FROM MECHANICAL STRESS OR DEBRIS<br>TURN OFF POWER DURING INSTALLATION OR SERVICING |

3G LIGHTING

**3.3”/4.5” ROUND WALL WASH DOWNLIGHT**
TRIM

**INSTALLATION INSTRUCTIONS**

**RMD -** REMODEL

**1**

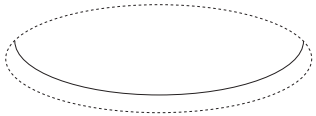

| FIXTURE TYPE | CEILING HOLE SIZE |
|---|---|
| **DL33RWW** | ⦸3.8125” |
| **DL45RWW** | ⦸5.1250” |

**2**

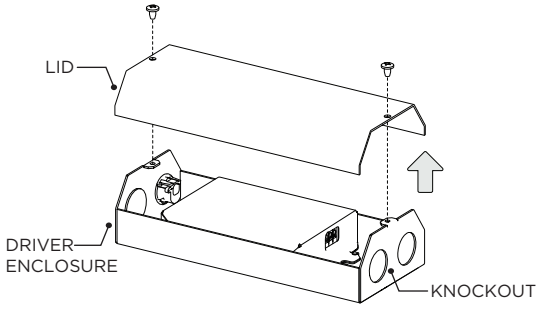


REMOVE LID AND KNOCKOUT FROM DRIVER ENCLOSURE

**3**

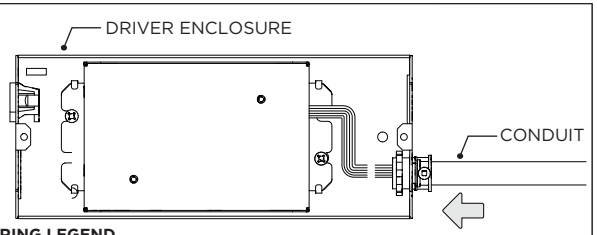


**WIRING LEGEND**

| | |
|---|---|
| BLACK | HOT/LINE |
| WHITE | NEUTRAL |
| GREEN | GROUND |
| ORANGE | (DIM-) |
| PURPLE | (DIM+) |

CONNECT CONDUIT TO DRIVER ENCLOSURE AND MAKE WIRING CONNECTIONS

**4**

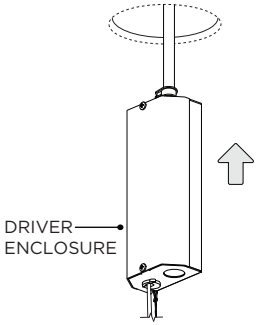


SECURE LID ONTO DRIVER ENCLOSURE AND INSERT INTO CEILING

**5**

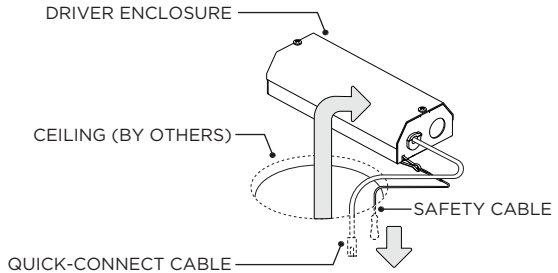


PLACE DRIVER ENCLOSURE ABOVE CEILING

**6**

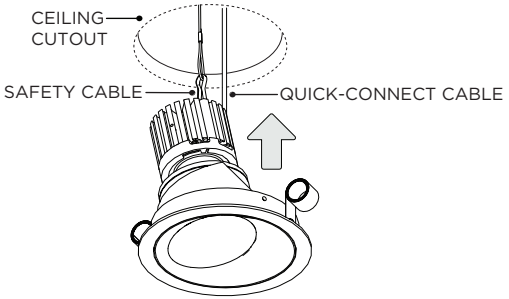


INSERT LED ASSEMBLY INTO CEILING

**6A**

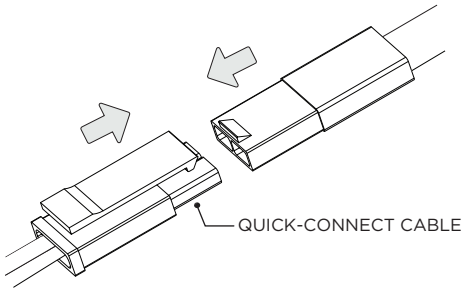


CONNECT SAFETY CABLE & QUICK-CONNECT CABLE TO LED ASSEMBLY

**6B**

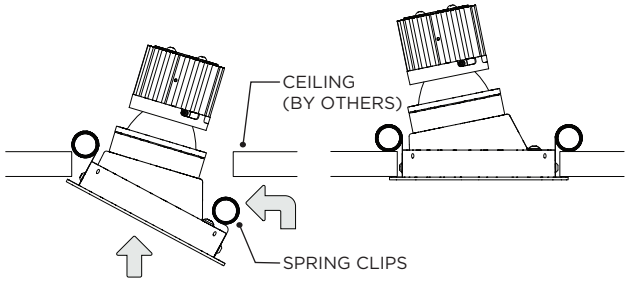

## **RMD -** REMODEL WITH REMOTE DRIVER ENCLOSURE

### 1 REMOTE DRIVER WIRING

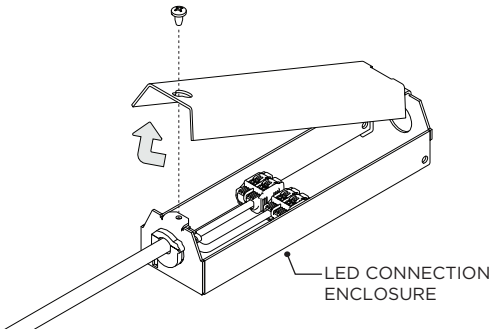


FOR REMOTE EMR DRIVER BOX, MAKE WIRED CONNECTIONS INSIDE PROVIDED LED CONNECTION ENCLOSURE

### 2

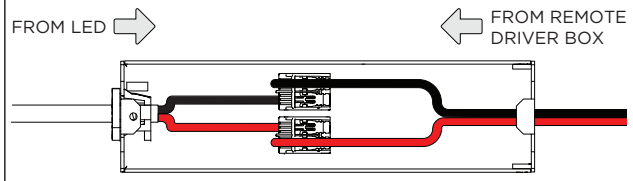


MAKE WIRING CONNECTIONS

3G LIGHTING

**3.3”/4.5” ROUND WALL WASH DOWNLIGHT**
TRIM

**INSTALLATION INSTRUCTIONS**

## **NCF -** NEW CONSTRUCTION FRAME (FOR NEW CONSTRUCTION ONLY)

### 1

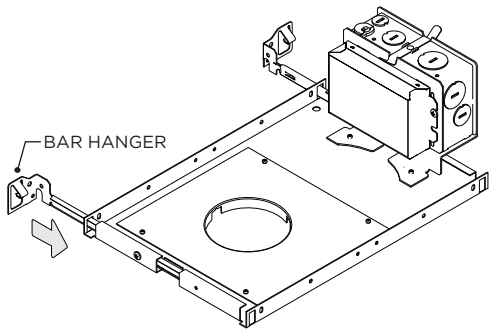


### 1A

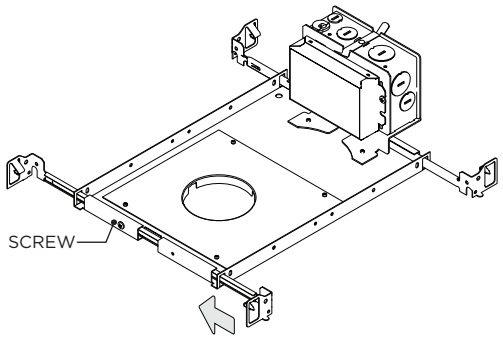


SECURE BAR HANGERS IN PLACE WITH SCREW

### 2

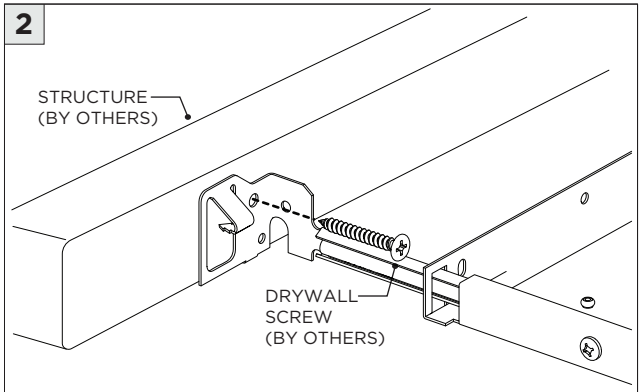


BAR HANGERS HAVE 14” to 26” EXTENSION

### 3

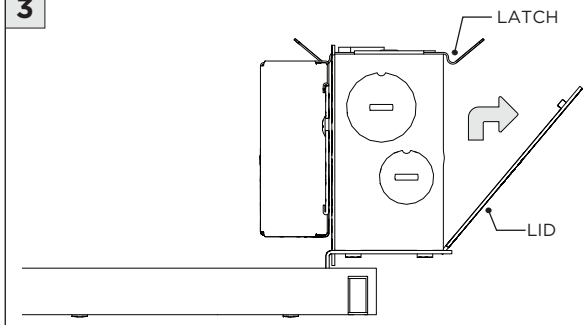


REMOVE ELECTRICAL BOX LID TO ACCESS WIRING

### 4

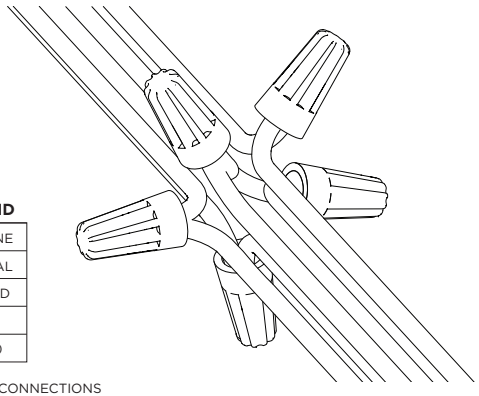

**WIRING LEGEND**

| | |
|---|---|
| BLACK | HOT/LINE |
| WHITE | NEUTRAL |
| GREEN | GROUND |
| ORANGE | (DIM-) |
| PURPLE | (DIM+) |

MAKE WIRING CONNECTIONS

### 5 FOR INTEGRATED BATTERY ONLY

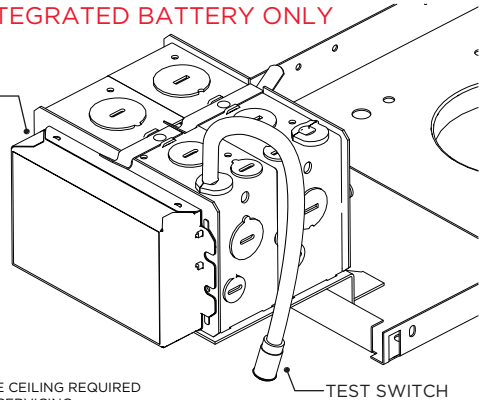


ACCESS ABOVE CEILING REQUIRED FOR BATTERY SERVICING

### 6

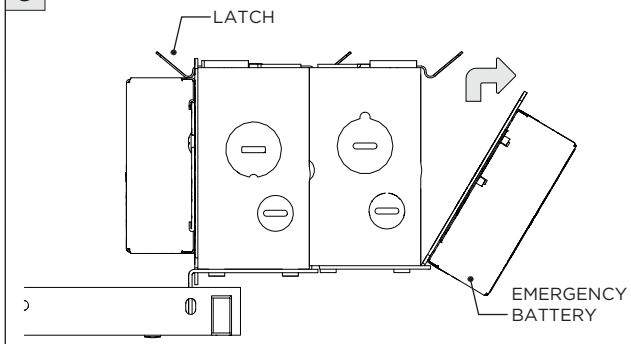


REMOVE BATTERY BOX COVER TO ACCESS WIRING

### 7

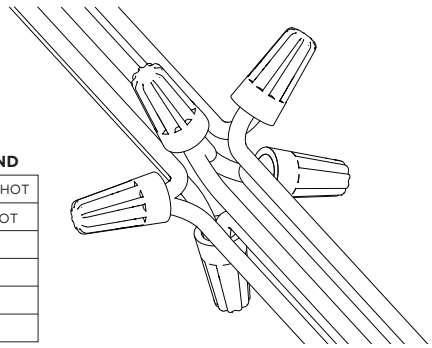

**EMB WIRING LEGEND**

| | |
|---|---|
| RED | UNSWITCHED HOT |
| BLACK | SWITCHED HOT |
| WHITE | NEUTRAL |
| GREEN | GROUND |
| ORANGE | (DIM-) |
| PURPLE | (DIM+) |

MAKE WIRING CONNECTIONS

### 8

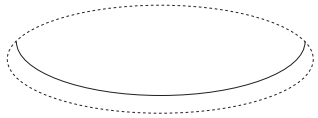

| FIXTURE TYPE | CEILING HOLE SIZE |
|---|---|
| DL33RWW | ⦸3.8125” |
| DL45RWW | ⦸5.1250” |

INSTALL CEILING BELOW FIXTURE

**9**

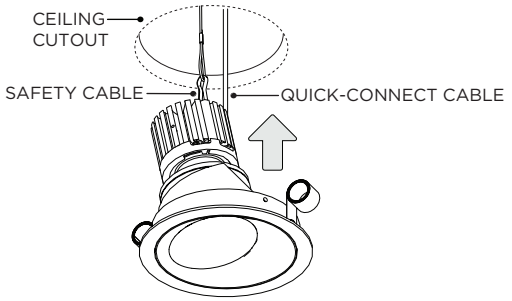


INSERT LED ASSEMBLY INTO CEILING

**9A**

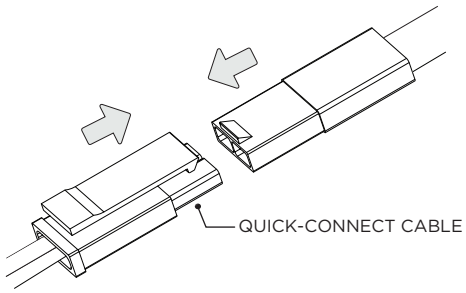


CONNECT SAFETY CABLE & QUICK-CONNECT CABLE TO LED ASSEMBLY

**9B**

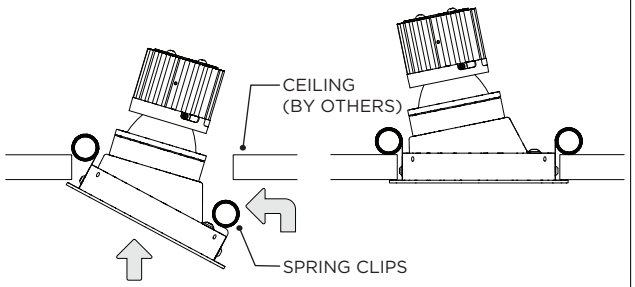

3G LIGHTING

**3.3”/4.5” ROUND WALL WASH DOWNLIGHT**
TRIM

**INSTALLATION INSTRUCTIONS**

**SH -** SHALLOW HOUSING (FOR NEW CONSTRUCTION ONLY)

**1**

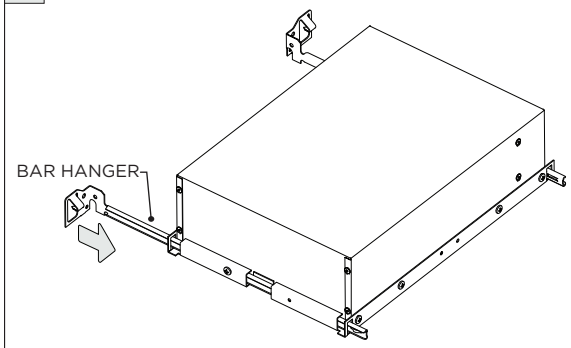


**2**

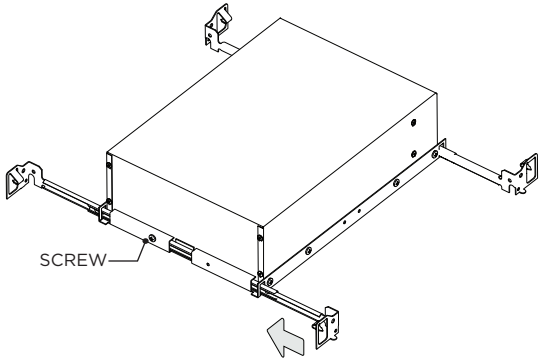


SECURE BAR HANGERS IN PLACE WITH SCREW

**3**

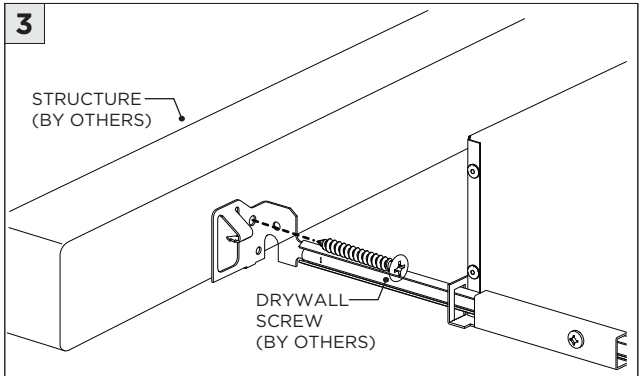


**4**

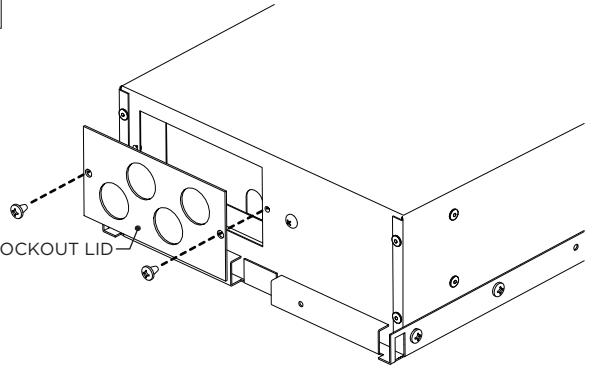


REMOVE ELECTRICAL BOX KNOCKOUT LID TO ACCESS WIRING

**4A**

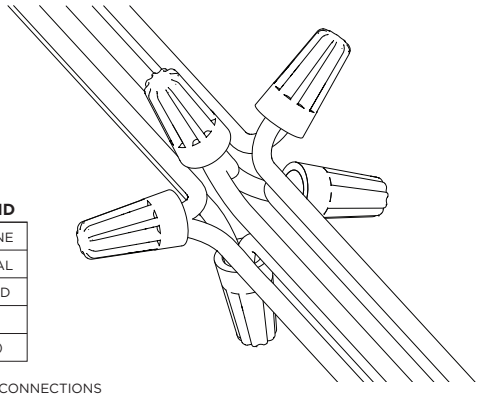

**WIRING LEGEND**

| | |
|---|---|
| BLACK | HOT/LINE |
| WHITE | NEUTRAL |
| GREEN | GROUND |
| ORANGE | (DIM-) |
| PURPLE | (DIM+) |

MAKE WIRING CONNECTIONS

**5**

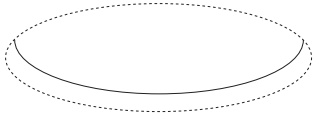

| FIXTURE TYPE | CEILING HOLE SIZE |
|---|---|
| **DL33RWW** | ⦰3.8125” |
| **DL45RWW** | ⦰5.1250” |

INSTALL CEILING BELOW FIXTURE

**6**

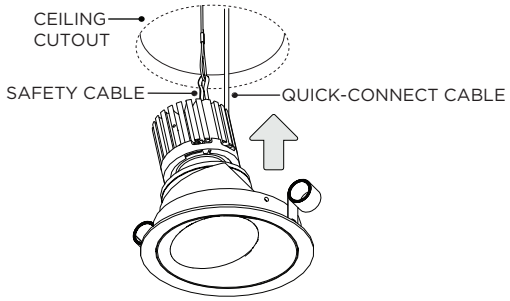


INSERT LED ASSEMBLY INTO CEILING

**6A**

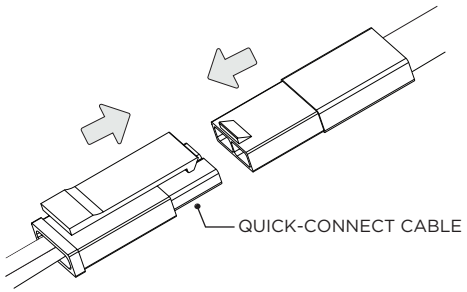


CONNECT SAFETY CABLE & QUICK-CONNECT CABLE TO LED ASSEMBLY

**6B**

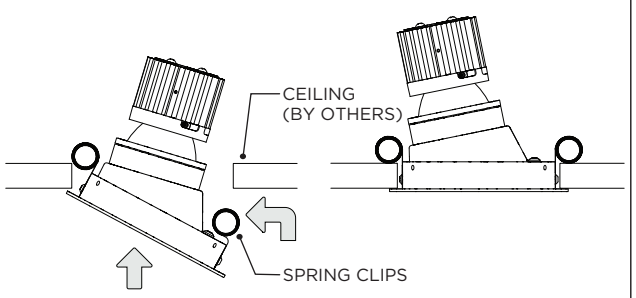

3G LIGHTING

**3.3”/4.5” ROUND WALL WASH DOWNLIGHT**
TRIM

**INSTALLATION INSTRUCTIONS**

## **NC/IC -** NEW CONSTRUCTION HOUSING (FOR NEW CONSTRUCTION ONLY)

### 1 BAR HANGER INSTALLATION
(IF SUPPLIED BY 3G)

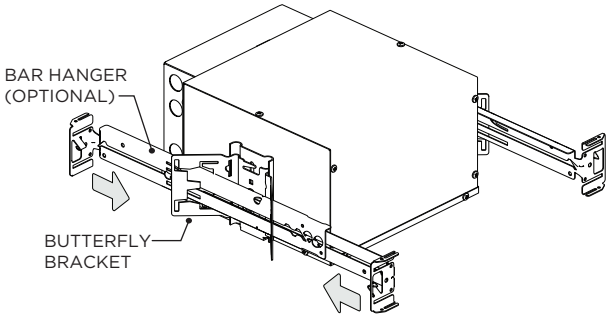


### 1A

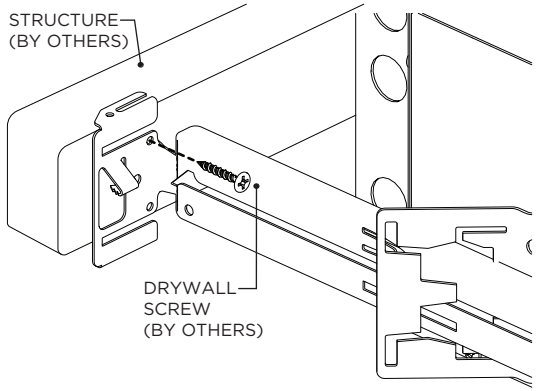


### 2 OTHER BAR HANGER INSTALLATION
(NOT PROVIDED BY 3G)

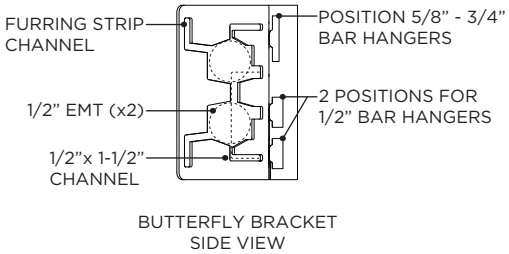


BUTTERFLY BRACKET
SIDE VIEW

### 3

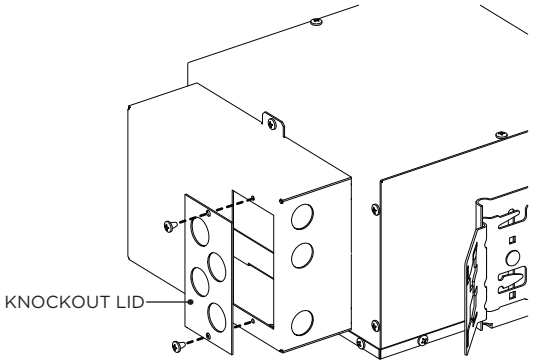


REMOVE ELECTRICAL BOX KNOCKOUT LID TO ACCESS WIRING

### 3A

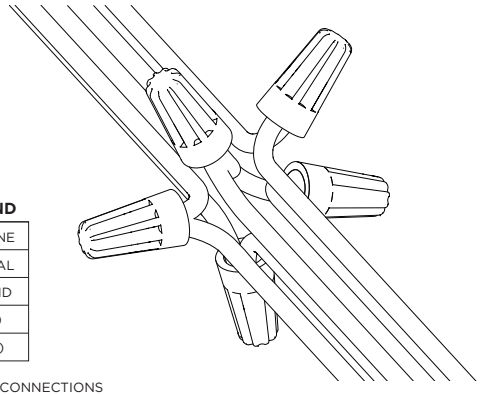

**WIRING LEGEND**

| | |
|---|---|
| BLACK | HOT/LINE |
| WHITE | NEUTRAL |
| GREEN | GROUND |
| ORANGE | (DIM-) |
| PURPLE | (DIM+) |

MAKE WIRING CONNECTIONS

### 4

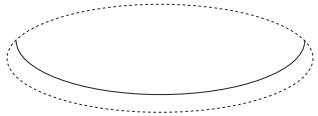

| FIXTURE TYPE | CEILING HOLE SIZE |
|---|---|
| **DL33RWW** | ⦰ 3.8125” |
| **DL45RWW** | ⦰ 5.1250” |

INSTALL CEILING BELOW FIXTURE

### 5

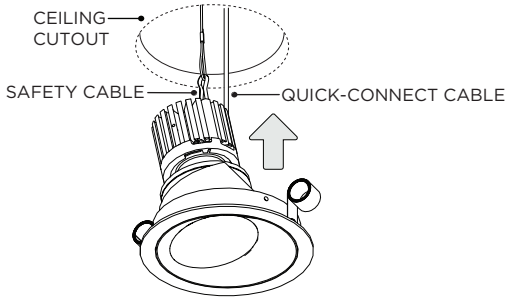


INSERT LED ASSEMBLY INTO CEILING

### 5A

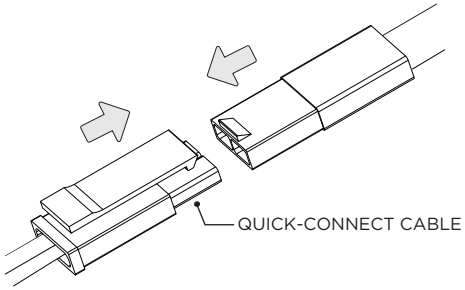


CONNECT SAFETY CABLE & QUICK-CONNECT CABLE TO LED ASSEMBLY

### 5B

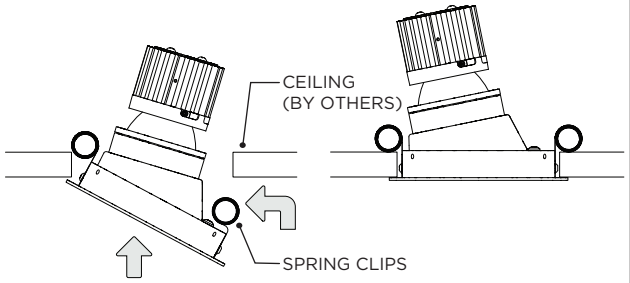

## LED SERVICING

**1**

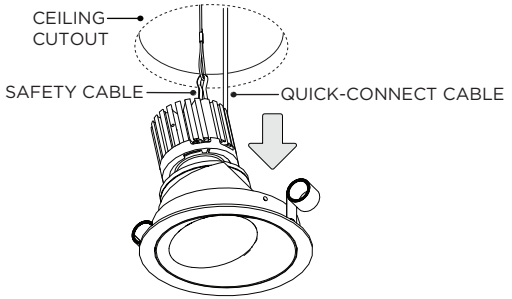


REMOVE LED ASSEMBLY FROM CEILING

**2**

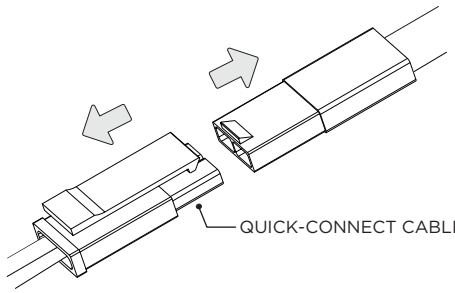


DISCONNECT SAFETY CABLE & QUICK-CONNECT CABLE FROM LED ASSEMBLY

**3**

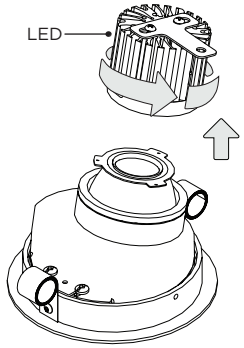

## DRIVER SERVICING

**1** **RMD -** REMODEL

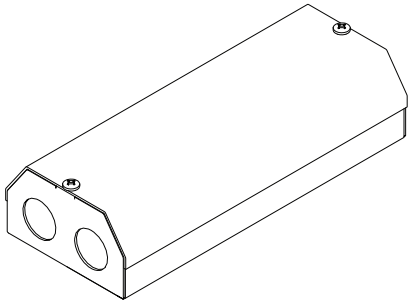

DISCONNECT POWER BEFORE SERVICING

**2**

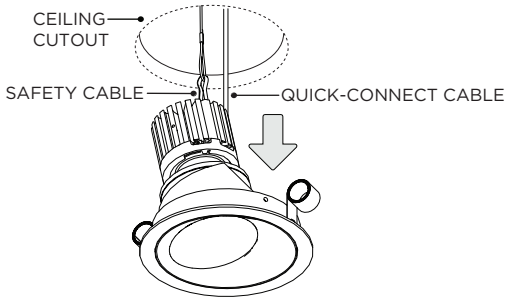


REMOVE LED ASSEMBLY FROM CEILING

**2A**

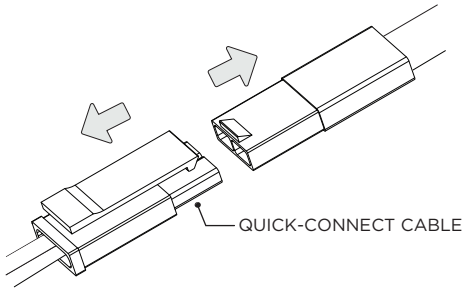


DISCONNECT SAFETY CABLE & QUICK-CONNECT CABLE FROM LED ASSEMBLY

**3**

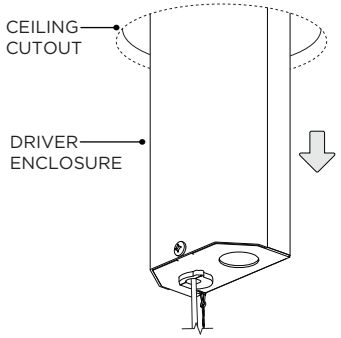


**4**

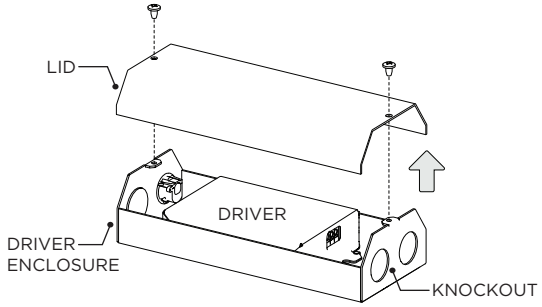

## DRIVER SERVICING

### 1 NCF - NEW CONSTRUCTION FRAME

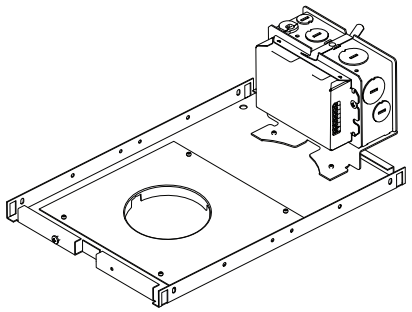

DISCONNECT POWER BEFORE SERVICING

### 2

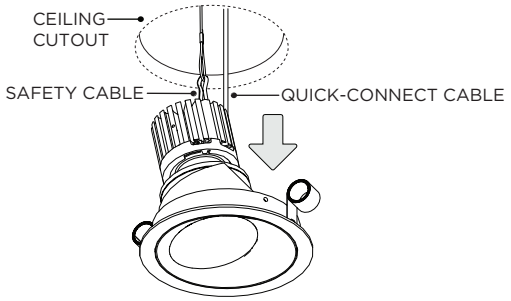


REMOVE LED ASSEMBLY FROM CEILING

### 2A

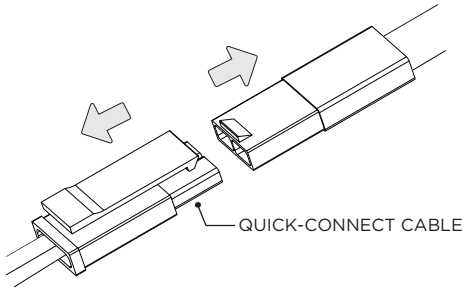


DISCONNECT SAFETY CABLE & QUICK-CONNECT CABLE FROM LED ASSEMBLY

### 3

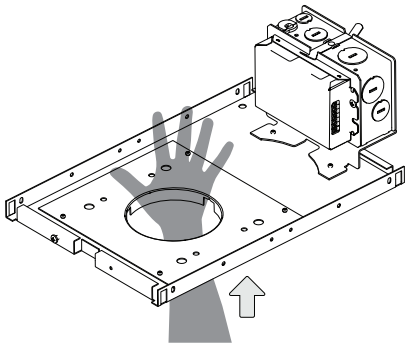

### 4

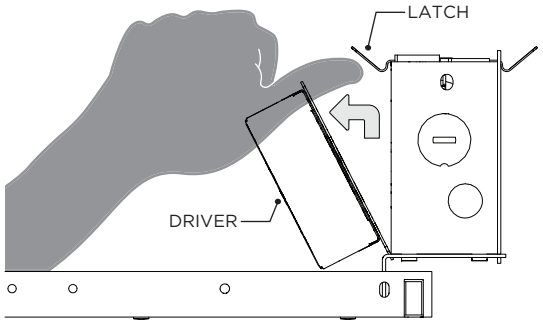


### 5

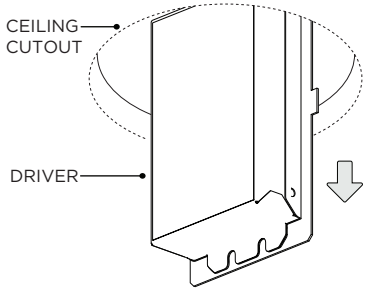


### 5A

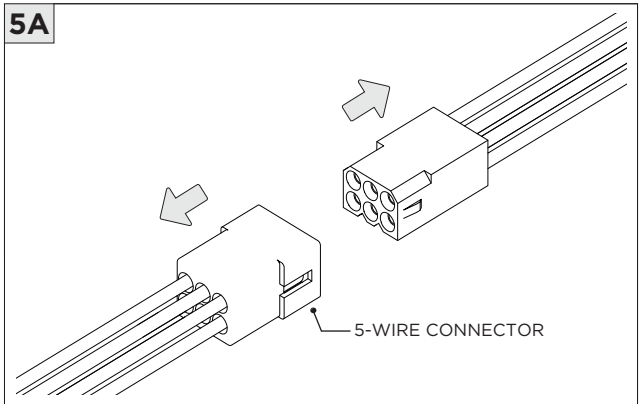


DISCONNECT 5-WIRE CONNECTOR

### 6 NCF - NEW CONSTRUCTION FRAME FOR INTEGRATED BATTERY ONLY

THIS UNIT UTILIZES MORE THAN ONE POWER SOURCE
DISCONNECT ALL POWER SOURCES BEFORE SERVICING

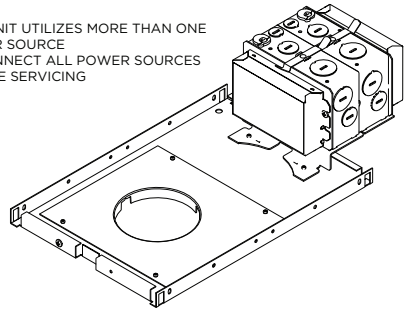

ACCESS ABOVE CEILING REQUIRED FOR DRIVER SERVICING

### 7

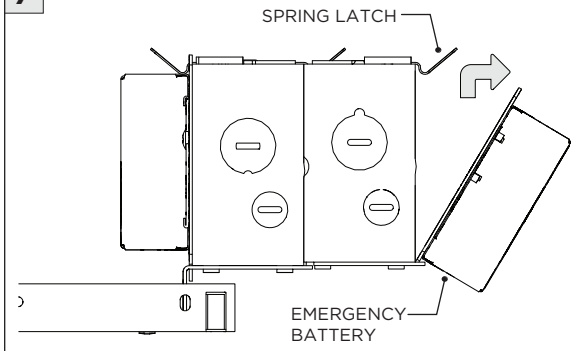


REMOVE BATTERY BOX COVER TO ACCESS WIRING

## DRIVER SERVICING

**1** **SH -** SHALLOW HOUSING

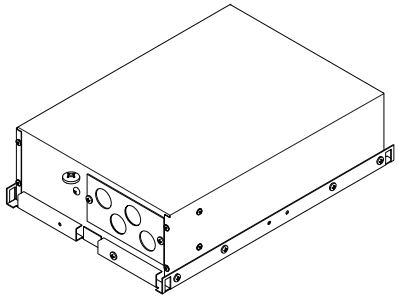

DISCONNECT POWER BEFORE SERVICING

**2**

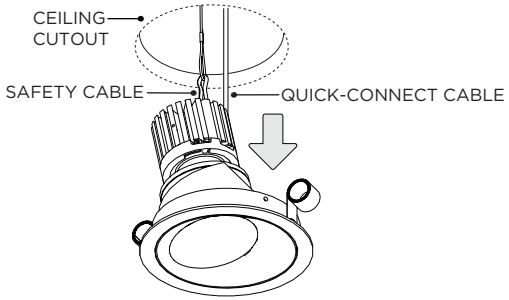


REMOVE LED ASSEMBLY FROM CEILING

**2A**

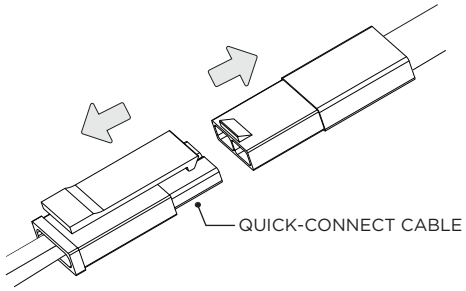


DISCONNECT SAFETY CABLE & QUICK-CONNECT CABLE FROM LED ASSEMBLY

**3**

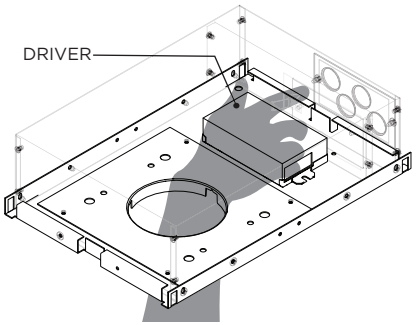


REMOVE DRIVER - SECURED WITH HOOK-AND-LOOP FASTENER

**4**

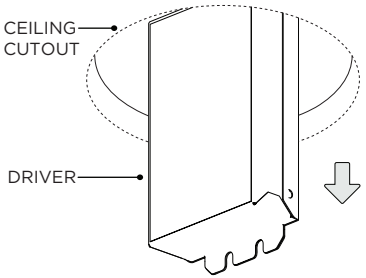


**4A**

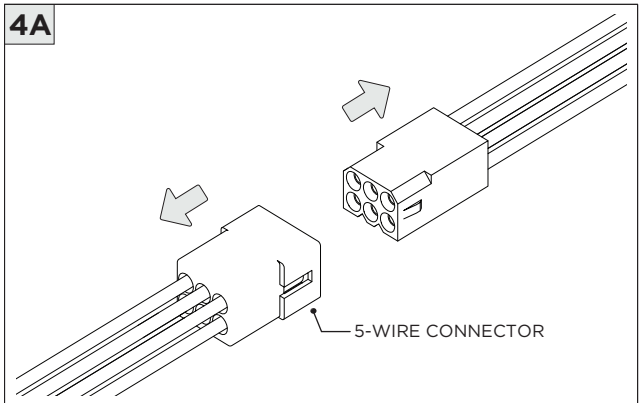


DISCONNECT 5-WIRE CONNECTOR

## DRIVER SERVICING

**1** **NC/IC -** NEW CONSTRUCTION HOUSING

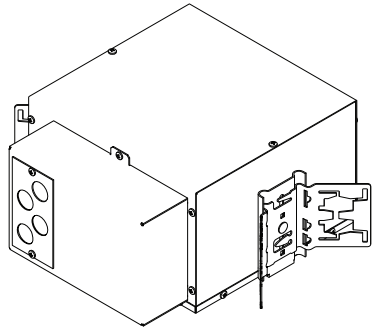

DISCONNECT POWER BEFORE SERVICING

**2**

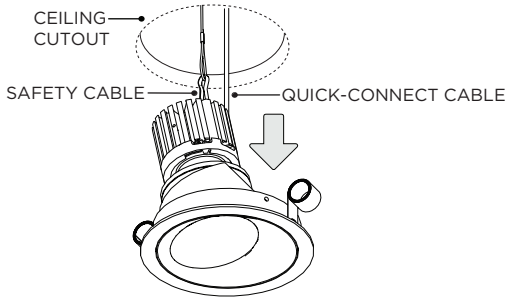


REMOVE LED ASSEMBLY FROM CEILING

**2A**

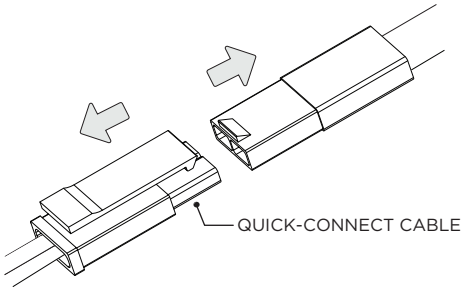


DISCONNECT SAFETY CABLE & QUICK-CONNECT CABLE FROM LED ASSEMBLY

**3**

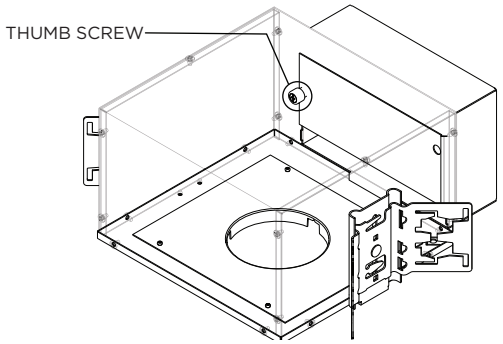


**4**

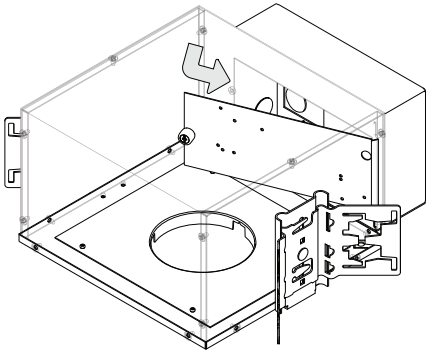

**5**

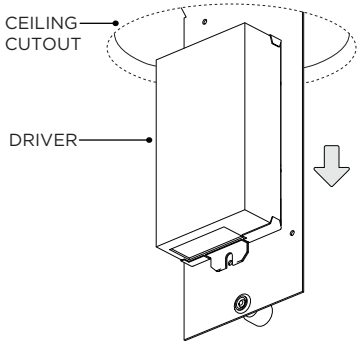


**5A**

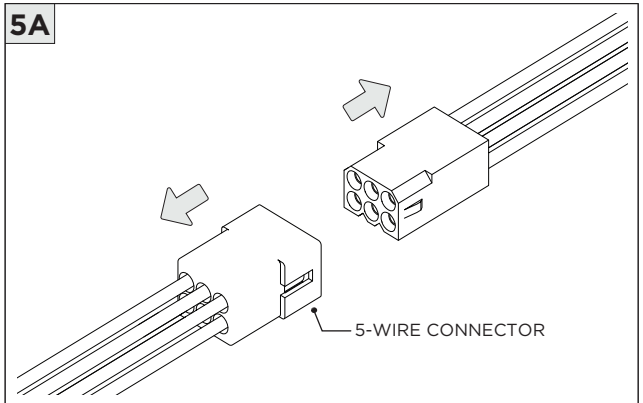


DISCONNECT 5-WIRE CONNECTOR