kurt versen
By Prescolite

DATE: LOCATION:

TYPE: PROJECT:

CATALOG #:

NOR-1.5S

NONI 1.5" SQUARE RECESSED FAMILY

Noni™

FEATURES

- Downlight and Lensed Wall Wash
- ¼" overlap micro flange and flush mount trims
- Cast aluminum, magnetically-attached reflectors with applied finishes
- TIR primary optics with various beam options. Proprietary Square in Square option available
- Remodeler IC applications
- Up to 700 delivered lumens @ 80 CRI 3000K
- 90 CRI (27, 30, 35, 40K); 80 CRI (30, 35K)



WET RATED

UL1598

SPECIFICATIONS

CONSTRUCTION

- Machined, die cast aluminum housing, finished matte black. Remodeler IC **(RHI)** inherently protected for direct contact with insulation installation
- Stainless steel leaf spring design provides grip range ⅝" to 1 ¼"
- Cast aluminum Downlight **(DL)** & Lensed Wall Wash **(LW)** reflector inserts available. Gasket centers insert and prevents light leak
- Housing attaches to remote driver enclosure with low voltage quick connects
- Optional Mounting Pan **(MP1.5RMB)** features CorrectCut. A rolled sheet metal edge which serves as a cutting guide for installers. Provides fixed cutout outer diameter which ensures reliable flange coverage and clean, finished appearance. *KV-exclusive*

TRIM CONSTRUCTION

- Cast aluminum reflector insert, matte finish. Can be mixed/matched with flange finish as desired. Insert attaches to collar via magnets. Gasket centers insert
- ¼" overlap flange. Thickness measures .046"
- Flush Mount **(FT)** mud-in ring is low profile, die-cast featuring an edge to plaster up to. Ring attaches to ceiling and comes with removable protective plug installed at factory

OPTICS

- Low profile, high efficiency polycarbonate TIR primary optics for **(DL)** function
- Square in Square **(SS)** optic option available
- Media holder included standard. Accepts 1 reflector accessory. Matte black finish, reduces visual brightness at top of trim

ELECTRICAL

- Integral LED module and driver are serviceable from below through housing aperture
- Chip-on-board LED. 2 SDCM CCT consistency
- LED rated life L70 at >55,000 hours (TM-21)
- Solid state constant current dimming driver. 1% options for 0–10V, ELV and TRIAC controls
- Drivers are UL Class 2, inherent short circuit and overload protection. RoHS compliant

CERTIFICATIONS

- cULus certified to UL 1598
- Suitable for wet locations
- Install in environments where ambient temperature does not exceed 25°C

WARRANTY

- 5 year warranty

KEY DATA	
Wattages	8
Beam Spreads	20, 25, 35, 50, 75
SDCM	2
Rated Life	L70 @ > 55,000 Hours

© 2026 HLI Solutions, Inc. All rights reserved. Information and specifications subject to change without notice. All values are design or typical values when measured under laboratory conditions.

kurt versen
By Prescolite

NOR-1.5S

NONI 1.5" SQUARE RECESSED FAMILY

DATE:	LOCATION:
TYPE:	PROJECT:
CATALOG #:	

ORDERING GUIDE

Examples: NOR-1.5SDL-RHI8-930K-MD-DM1NU-FWHS-SOL / NOR-1.5SDS-TRM-RBL

CATALOG #

HOUSING

NOR-1.5S		RHI	8		
Series	**Function**	**Housing**	**Output**	**CRI/CCT**	**Beam Spread [1]**
NOR-1.5S Noni Recessed 1.5" Square	**DL** Downlight **LW** Lensed Wall Wash	**RHI** Remodeler Housing, IC	**8** 8 Watt	**927K** 90 CRI, 2700K **930K** 90 CRI, 3000K **935K** 90 CRI, 3500K **940K** 90 CRI, 4000K **830K** 80 CRI, 3000K **835K** 80 CRI, 3500K	**VN** Very Narrow (.36 SC / 20°) **NR** Narrow (.42 SC / 25°) **MD** Medium (.56 SC / 35°) **WD** Wide (.76 SC / 45°) **SS** Square in Square (1.0 SC / 70°) **LW** Lensed Wall Wash [3]

	N	U			
Dimming	**Controls**	**Voltage**	**Reflector Flange Color**	**Downlight Lens [4]**	**Accessories**
DM1 0–10V 2% **PDM** ELV, TRIAC 2%	**N** None	**U** Universal Voltage (120–277V)	**Flanged** **WHS** White **GYS** Gray **BLS** Black **COS** Copper **AMW** Anti-Microbial White **FX** Custom Finish **Flush Mount** **FT** Flush Mount	**SOL** Solite **CLR** Clear **FRS** Frosted **LIN** Linear Spread (10 x 40°) **HEX** Hexcel Louver **NON** No Lens	**MP1.5** Mounting Pan **RMB** Residential Mounting Bars

TRIM

NOR-1.5S		TRM		FRS
Series	**Function**	**Trim**	**Reflector Insert Color**	**Wall Wash Lens [5]**
NOR-1.5S Noni Recessed 1.5" Square	**DL** Downlight **LW** Lensed Wall Wash	**TRM** Trim	**Texture** **RWH** White **RGY** Gray **RBL** Black **RGT** Graphite **RPP** Pink Panache **RGH** Grasshopper **Smooth** **RWHS** White **RGYS** Gray **RBLS** Black **RCOS** Copper **RAMW** Anti-Microbial White **Other** **RX** Custom Finish	**FRS** Frosted

Notes:

1 DL performance based on SOL lens with RWHS insert finish
2 Available only with FRS lens
3 Available only when LW function is selected
4 For use with DL function. Leave blank for LW function
5 For use with LW function. Leave blank for DL function

© 2026 HLI Solutions, Inc. All rights reserved. Information and specifications subject to change without notice. All values are design or typical values when measured under laboratory conditions.

NOR-1.5S

NONI 1.5" SQUARE RECESSED FAMILY

DATE: LOCATION:

TYPE: PROJECT:

CATALOG #:

PERFORMANCE DATA

Performance data provided below based on 80 CRI, 3000K with White reflector and Solite lens. Extra Wide (XW) and Lensed Wall Wash (LW) performance includes White reflector and Frosted lens.

Output	Beam Spread	Beam	Delivered Lumens	Efficacy	Spacing Criterion	Candela @ 0°
8 Watt	Very Narrow **(VN)**	20x20	693	90	0.34	3705
	Narrow **(NR)**	25x25	692	90	0.42	2737
	Medium **(MD)**	35x35	650	84	0.58	1486
	Wide **(WD)**	50x50	699	91	0.76	1001
	Extra Wide **(XW)**	75x75	358	47	1.18	196

Output		Delivered Lumens	Efficacy	Max Candela
8 Watt	Wall Wash **(LW)**	271	35	206

MULTIPLIER TABLE

CRI, CCT	927	930	935	940	830	835
	0.83	0.86	0.87	0.87	1.0	1.02

Media	SOL	CLR	LIN	HEX	FRS	NON
	1.0	1.02	0.91	0.71	0.73	1.12

Output	8 Watt
	1.0

Finishes	RWH	RGY	RBL	RGT	RPP	RGH	RWHS	RGYS	RGBLS	RCOS	RAMW
	1.0	0.9	0.85	0.85	0.8	0.8	1.02	0.95	0.9	0.8	1.05

ELECTRICAL DATA

	DM1	PDM
Dimming Protocols Supported	0–10V	ELV, TRIAC
Input Voltage	120–277V	120–277V
Input Frequency	50/60 Hz	50/60 Hz
Dim Level	0.02	0.02
Power Factor (PF)	≥0.90	≥0.90
Total Harmonic Distortion (THD)	≤20%	≤20%
Inrush Current	NEMA 410 Limit	NEMA 410 Limit
Electromagnetic Interference (EMI) Filtering	FCC CFR Title 47 Part 15 Class B	FCC CFR Title 47 Part 15 Class B
Transient Surge Protection	IEEE C62.41.1-2002 & C62.41.2-2002 Category A	IEEE C62.41.1-2002 & C62.41.2-2002 Category A

© 2026 HLI Solutions, Inc. All rights reserved. Information and specifications subject to change without notice. All values are design or typical values when measured under laboratory conditions.

kurt versen
By Prescolite

DATE: LOCATION:

TYPE: PROJECT:

CATALOG #:

NOR-1.5S

NONI 1.5" SQUARE RECESSED FAMILY

DIMENSIONS

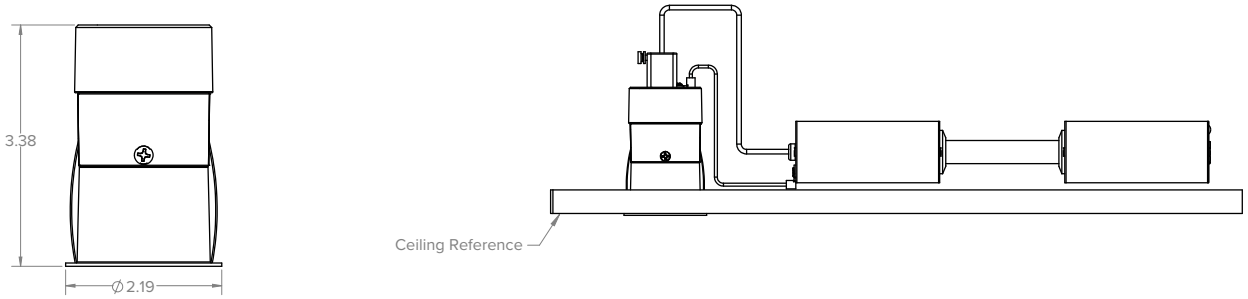

Housing

Flush Mount (FT)

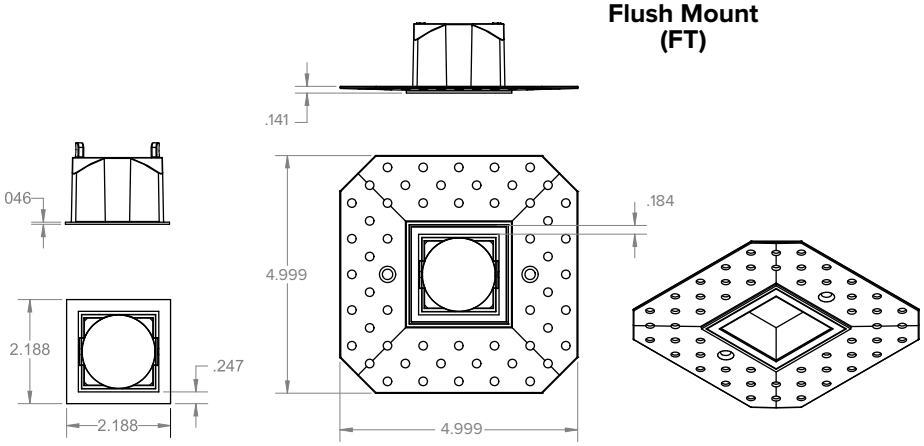

Reflector Collar

Downlight (DS)

Wallwash (LW)

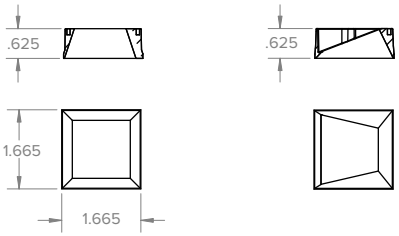

Reflector Insert

Bottom View

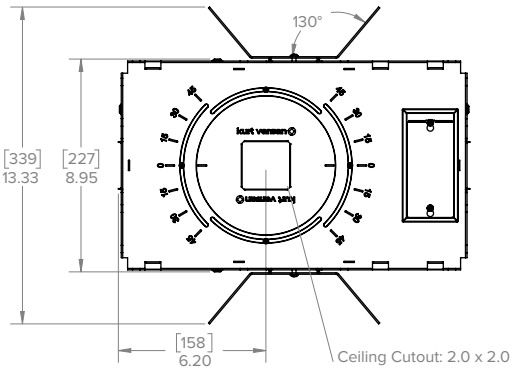

Side View

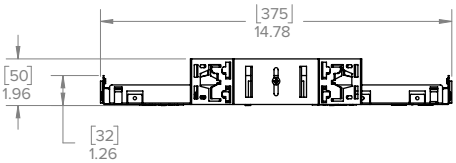

Mounting Pan Accessory (Optional)

© 2026 HLI Solutions, Inc. All rights reserved. Information and specifications subject to change without notice. All values are design or typical values when measured under laboratory conditions.