prescolite

DATE: LOCATION:

TYPE: PROJECT:

CATALOG #:

LFR-6RW

LITEFRAME 6" ROUND LENSED WALL WASH

LITEFRAME 2.0

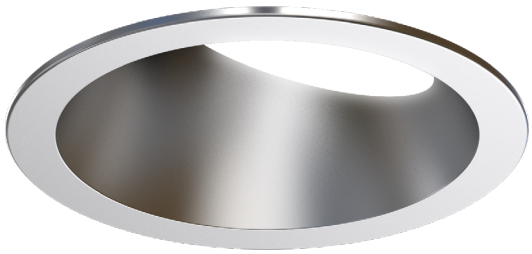

FEATURES

- 6" LED lensed wall wash delivering 1000–8000 lumens
- Direct Install from below ceiling for New Construction or Remodel applications
- Optional housing accessories available
- Provides smooth, uniform illumination
- 2700K–5000K, 90+ CRI (2 SDCM)
- Dimming protocols include 0–10V, Phase (Forward/Reverse), DALI, DMX, and Lutron EcoSystem
- NX Lighting Controls wired and wireless controls capability available

C US WET LOCATION IP65 TriGain® technology

SERVICE PROGRAMS

STOCK QS10

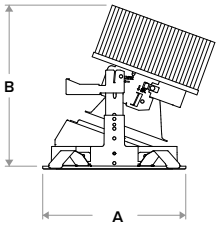

Typical Dimensions and Weights			
Lumen Package	"A" Diameter Inches (mm)	"B" Height Inches (mm)	Weight Lbs (kg)
10L–35L	7.13 (181)	6.37 (162)	4.9 (2.2)
40L–50L	7.13 (181)	6.91 (176)	5.1 (2.3)
60L–80L	7.13 (181)	8.02 (204)	5.7 (2.6)

See DIMENSIONS section for complete details

CONTROLS TECHNOLOGY

NX WIRELESS NX WIRED

SPECIFICATIONS

CONSTRUCTION

- Standard Fixture Module designed for Non-IC, Direct Install construction
- Optional Non-IC frame or IC housing available with pre-installed bar hangers
- Die cast aluminum fixture module support ring with spring steel clips for secure mounting to ceiling
- Driver J-Box can be installed and accessed from below the ceiling as direct install or easily snap on to optional housing frame/enclosure
- Light Engine connections use plenum rated (CMP) cable

OPTICS

- Tempered Glass Lens standard
- Provides uniform light distribution down the wall
- High purity spun aluminum reflector, self-flanged
- Specular or Semi-Specular anodized or White painted cone reflector finish/colors
- Painted flange options in White or Black

ELECTRICAL

- Chip-on-board LED with 2 SDCM
- Multiple CCTs, TriGain technology 90+ CRI
- Long LED life: L90 at >50,000 hours (TM-21)
- Universal voltage 120–277V driver, 347V optional
- UL Class 2, inherent short circuit and overload protection
- Flicker-free dimming options in a wide range of protocols from 1% to <0.1% performance
- 0–10V, Phase (Forward/Reverse), DALI, DMX, and Lutron EcoSystem options
- NX Lighting Controls provides options for standalone and networked functionality with wired or wireless connectivity for NX system deployments
- Remote emergency battery option available
- Current's patented TriGain® phosphor delivers 90 CRI color quality at 80 CRI efficacy

INSTALLATION

- Accommodates ceiling thickness from 0.50" to 1.25"
- Fixture Module including driver fully accessible from above or below the ceiling
- 10L–15L Fixture Modules are inherently protected IC without the use of IC housing enclosure. (IC housing is still recommended when using loose-fill or spray foam insulation types)

CERTIFICATIONS

- cCSAus certified to UL 1598
- For ≥60L: Marked spacing required 36" fixture center to center; 18" fixture center to building member; 0.5" above fixture
- IP65 rated (room side) when properly installed per installation instructions
- Suitable for wet locations, covered ceiling
- EMR: Certified under UL 924 standard for emergency lighting and power equipment
- EMR: Emergency battery packs are California Energy Commission (CEC) Title 20 Compliant
- Approved for 8 (4 in/4 out) No. 12AWG conductors rated for 90°C through wiring
- Suitable for -20°C to 25°C standard. Up to 40°C available on certain configurations, contact factory for details

WARRANTY

- 5 year warranty

KEY DATA	
Lumen Range	1000–8000
Wattage Range	7–69
Efficacy Range (LPW)	102–116
Reported Life (Hours)	L90 / >50,000
Input Current (mA)	63–576 (120V)

*Based on Specular, 35K, 90 CRI

© 2026 HLI Solutions, Inc. All rights reserved. Information and specifications subject to change without notice. All values are design or typical values when measured under laboratory conditions.

prescolite

DATE: LOCATION:

TYPE: PROJECT:

CATALOG #:

LFR-6RW

LITEFRAME 6" ROUND LENSED WALL WASH

Gray Shading = Service Program STOCK QS10 Limit of 150 Luminaries

ORDERING GUIDE

Example: LFR-6RW-M-10L35K9-LWW-DM1 / LFR-6RW-T-LWW-S / LFR-6RD-H

CATALOG #

FIXTURE MODULE

LFR-6RW-M – [ ] [ ] 9 – LWW – [ ] [ ] [ ] – [ ]

Ap/Shp/Funct	Lumen Output	CCT	CRI	Distribution	Driver Options	Control Options	Voltage	Module Options
LFR-6RW-M 6" Round Lensed Wall Wash Fixture Module for Direct Install *(Non-IC frame or IC housing available under Housing Options below)*	**10L** 1000 **15L** 1500 **20L** 2000 **25L** 2500 **30L** 3000 **35L** 3500 **40L** 4000 **50L** 5000 **60L** 6000[1] **70L** 7000[1] **80L** 8000[1]	**27K** 2700K **30K** 3000K **35K** 3500K **40K** 4000K **50K** 5000K	**9** 90+	**LWW** Lensed Wall Wash	**DM1** 0–10V Dimming to 1% **DM01** 0–10V Dimming to < 1%[2] **PDM** Phase (Forward/Reverse) Dimming to 1%[2] **DMX** DMX with RDM dimming to < 0.1%[2] **DALI** DALI Dimming to 1%[2] **EDM** Lutron Hi-Lume EcoSystem Dimming to 1%[2]	**NX Lighting Controls** Networked Wireless **NXW** NX Networked Wireless Radio Module NXRM2 and Bluetooth Programming, without Sensor[3] Networked Wired **NXE** NX Wired Dual RJ45 SmartPORTS, without Sensor[3]	*Standard 120–277V* **34** 347V[4]	**CP** Chicago Plenum[5,6] **EMR** 10W Emergency Battery Pack (CEC Title 20 Compliant) with remote test switch and indicator light[6] **DTS** Device Transfer Switch with Dimming Bypass[6,7]

TRIM (Ships separately)

LFR-6RW-T – [ ] – [ ] [ ] [ ]

Aperture/Shape/Function	Distribution	Reflector Finish/Color	Flange Color Options	Lower Trim Options
LFR-6RW-T 6" Round Lensed Wall Wash Trim Assembly	**LWW** Lensed Wall Wash	**S** Specular **SS** Semi-Specular **WC** Painted White Cone and Flange	*Standard matches reflector color* **WT** White Flange[8] **BT** Black Flange	**FM** Flush Mount Mud-In Ring[11]

HOUSING OPTIONS (Ships separately)

Aperture/Shape/Function	
☐ **LFR-6RD-H**	6" Housing Frame, New Construction, Non-IC
☐ **LFR-6RD-H-IC**	6" Housing Enclosure, New Construction, IC Rated[9,10]

Accessories	
☐ **LiteGear**	LiteGear® Inverter, 125VA–250VA
☐ **LPS Series**	LightPower Micro-Inverter, 20VA–55VA
☐ **LF-FMR6-R**	Flush Mount Mud-in Ring, 6"[11]
☐ **LF-MOR6-R-WH**	Metal Oversized Ring, 6" Round, White (10.12" outside diameter)

Notes:

1 60L and 80L require marked spacing. See line art for more details.
2 DM01, PDM, DMX, DALI available up to 50L. EDM available 15L–40L.
3 NX requires DM1 driver option.
4 347V requires DM1 driver option; Available 10L–40L; not available with Controls, DTS, EMR.
5 CP not available with PDM, DMX, or Controls.
6 Module options not available in combination.
7 DTS available with DM1, DM01 or DALI.
8 WT not needed for WC.
9 IC available up to 35L; 10L–15L Fixture Modules are inherently protected IC without the use of IC housing enclosure. (IC housing is still recommended when using loose-fill or spray foam insulation types.)
10 IC Housing not for use in combination with Controls or with Module Options CP, EMR, DTS.
11 Flush Mount Flange (FM) requires FMR accessory (sold separately).

© 2026 HLI Solutions, Inc. All rights reserved. Information and specifications subject to change without notice. All values are design or typical values when measured under laboratory conditions.

prescolite

DATE: LOCATION:

TYPE: PROJECT:

CATALOG #:

LFR-6RW

LITEFRAME 6" ROUND LENSED WALL WASH

NX LIGHTING CONTROLS

	Control Option Ordering Logic & Description		Control Option Functionality								Control Option Components	
			Networkable	Grouping	Scheduling	Occupancy/ Motion	Daylight Harvesting	0-10V Dimming	On/Off Control	Bluetooth App Programming		
NX Wireless	NXW	NX Networked Wireless Radio Module NXRM2 and Bluetooth Programming, without Sensor	✓	✓	✓	-	-	✓	✓	✓		NXRM2-H
NX Wired	NXE	NX Wired Dual RJ45 SmartPORTS, without Sensor	✓	✓	✓	-	-	✓	✓	✓[1]		NXDSP

1 Requires NXBTC, order separately.

NX LIGHTING CONTROLS APP



The NX Lighting Controls App is a free to use mobile application for programming both an NX Lighting Controls System or Standalone Bluetooth Sensors. The mobile app allows you to configure devices, discover and setup wireless enabled luminaires and program your NX system settings.

Android

Apple iOS

PERFORMANCE DATA TABLE

Performance data provided below is for 3500K, 90+ CRI with Specular Clear reflector finish/color

Lumen Package	Nominal Lumens	Distribution	Delivered Lumens	Watts	LPW
10L	1000	Lensed Wall Wash	910	7.4	123
15L	1500		1390	11.3	123
20L	2000		1653	14.2	116
25L	2500		2346	19.3	122
30L	3000		2876	24.1	119
35L	3500		3378	28.9	117
40L	4000		3744	32.3	116
50L	5000		4657	42	111
60L	6000		5712	49.4	116
70L	7000		6650	58.9	113
80L	8000		7578	69	110

© 2026 HLI Solutions, Inc. All rights reserved. Information and specifications subject to change without notice. All values are design or typical values when measured under laboratory conditions.

prescolite

DATE: LOCATION:

TYPE: PROJECT:

CATALOG #:

LFR-6RW

LITEFRAME 6" ROUND LENSED WALL WASH

DIMENSIONS

LFR-6RW-M

Fixture Module consists of Light Engine and Driver J-Box assemblies. Overall dimensions for each are dependent upon configuration selected. See the following pages for details.

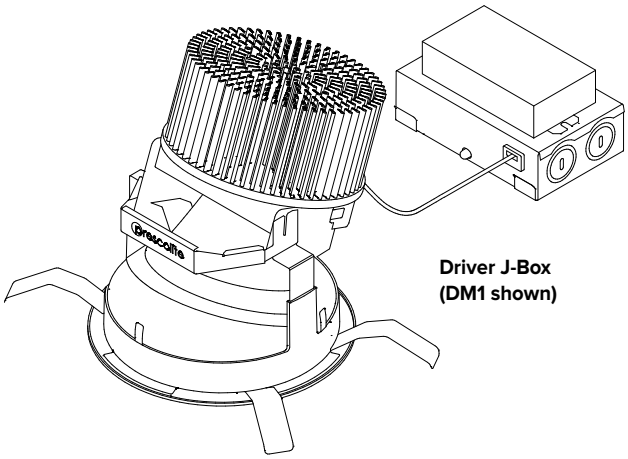

Driver J-Box (DM1 shown)

Light Engine with Trim assembly installed

DIMENSIONAL DATA		
APERTURE		ø5.75" (101.6mm)
OVERALL		Ø 7.13" (181.0mm)
FLANGE WIDTH	Standard	0.69" (17.5mm)
	Flush Mount	0.20" (5.1mm)
FLANGE TO FLANGE	Standard	Ø7.13" (136.6mm)
	Flush Mount	Ø6.15" (156.2mm)
CEILING CUTOUT	Standard	Ø6.50" (165.1mm)
	Flush Mount	Ø6.63" (168.4mm)
CEILING THICKNESS		0.50" – 1.25" (12.7 – 31.75mm)

LFR-6RW LIGHT ENGINE

OVERALL LIGHT ENGINE HEIGHT "A" *		
LUMEN PACKAGE	FIXTURE MODULE	BEAM DISTRIBUTION
		LWW
10L–35L	STANDARD	6.37" (161.8mm)
	CP	8.68" (220.5mm)
40L–50L	STANDARD	6.91" (175.5mm)
	CP	8.68" (220.5mm)
60L–80L	STANDARD	8.02" (203.7mm)
	CP	8.68" (220.5mm)

* Note: Add ½" minimum plenum clearance above overall Light Engine Height.
** For ≥60L: Marked spacing required 36" fixture center to center; 18" fixture center to building member; 0.5" above fixture.
*** Non-IC rating requires 3" from insulation and combustible materials.

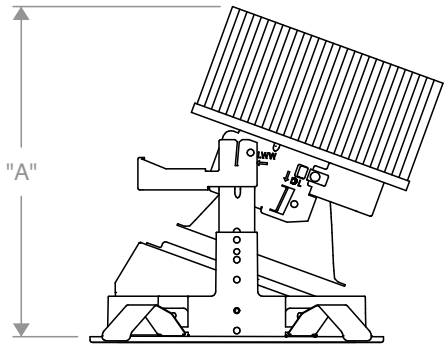

Side View Standard

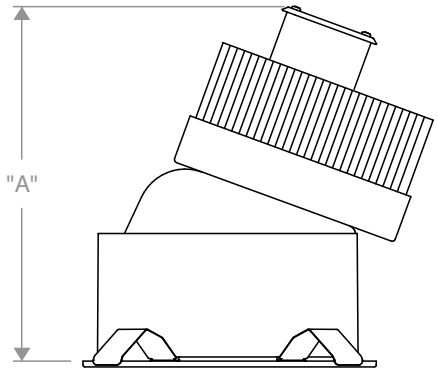

Side View CP – Chicago Plenum

© 2026 HLI Solutions, Inc. All rights reserved. Information and specifications subject to change without notice. All values are design or typical values when measured under laboratory conditions.

LFR-6RW

LITEFRAME 6" ROUND LENSED WALL WASH

DIMENSIONS (CONTINUED)

DRIVER J-BOX

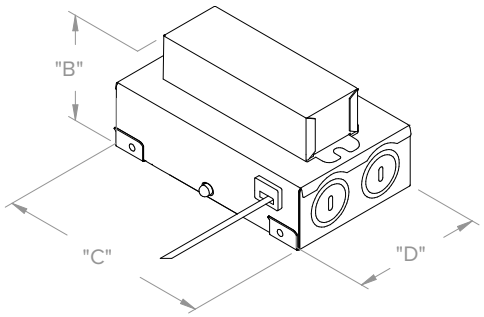

DM1 / DM01 / PDM / DALI

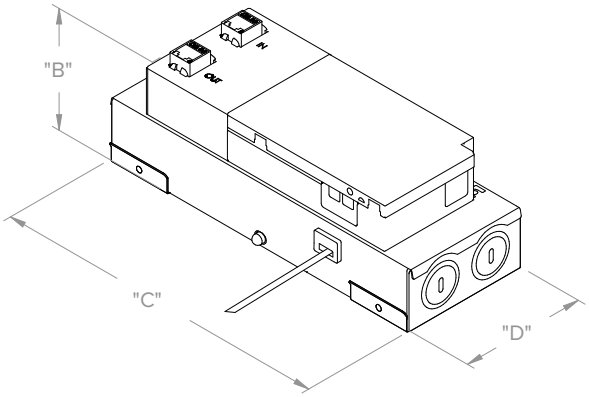

DMX

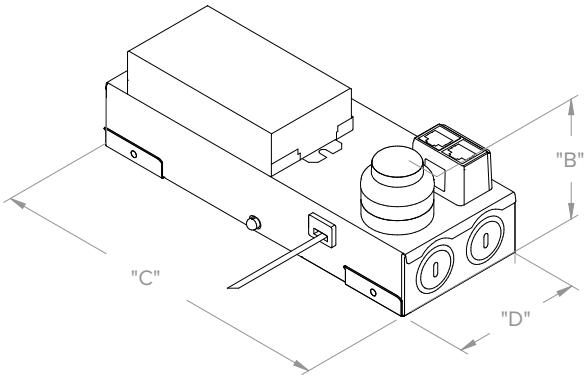

NX CONTROLS OPTION

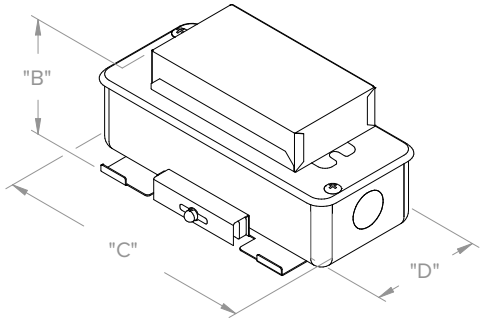

CP

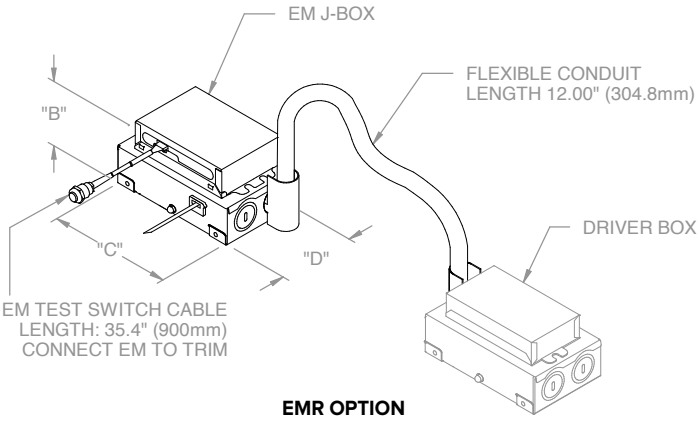

EMR OPTION

EMR/Driver J-Box Conduit (provided) connects to Driver J-Box
(see Driver J-Box for additional details)

OVERALL DRIVER J-BOX DIMENSIONS (ALL LUMEN OUTPUTS)				
DRIVER/ CONTROLS /OPTIONS	"B" (HEIGHT)	"C" (LENGTH)	"D" (WIDTH)	MINIMUM J-BOX PLENUM CLEARANCE
DM1 / DM01 / PDM / DALI	2.67" (67.8mm)	5.34" (135.6mm)	3.23" (82.0mm)	3.00" (76.2mm)
DMX	3.07" (78.0mm)	8.68" (220.5mm)	3.23" (82.0mm)	3.50" (88.9mm)
NX	3.02" (76.7mm)	8.68" (220.5mm)	3.23" (82.0mm)	3.75" (95.3mm)
EMR	2.73" (69.3mm)	5.34" (135.6mm)	3.23" (82.0mm)	3.00" (76.2mm)
CP	1.89" (73.4mm)	6.50" (165.1mm)	2.72" (69.1mm)	3.00" (76.2mm)

© 2026 HLI Solutions, Inc. All rights reserved. Information and specifications subject to change without notice. All values are design or typical values when measured under laboratory conditions.

DATE: LOCATION:

TYPE: PROJECT:

CATALOG #:

LFR-6RW

LITEFRAME 6" ROUND LENSED WALL WASH

DIMENSIONS (CONTINUED)

OPTIONAL HOUSINGS

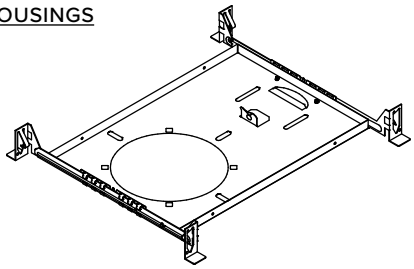

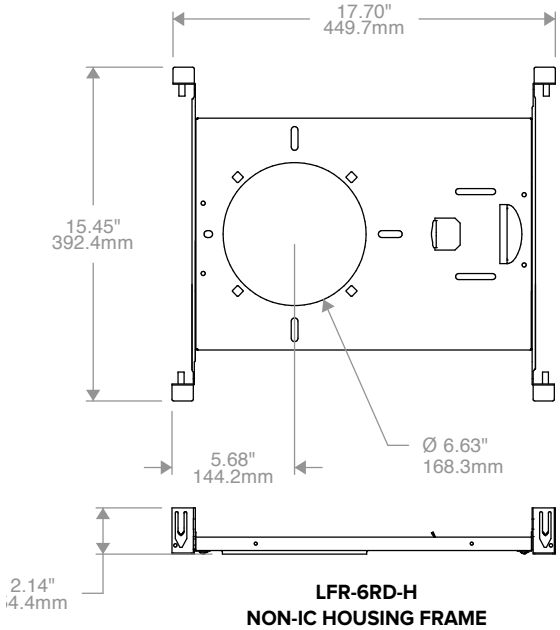

LFR-6RD-H
NON-IC HOUSING FRAME

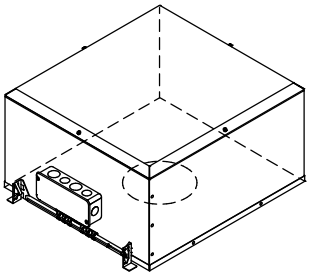

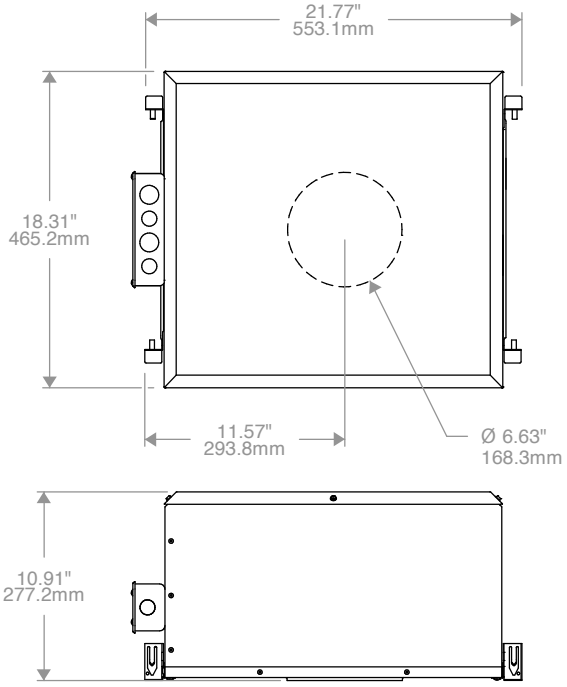

LFR-6RD-H-IC
IC HOUSING
Not for use with CP Shroud

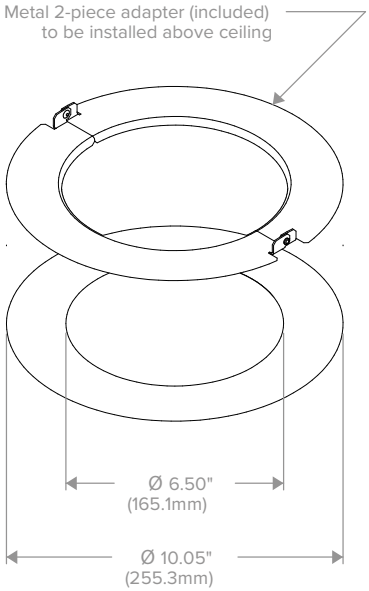

ROUND LF-MOR6-R
METAL OVERSIZED RING
(See LF-MOR Installation Instruction for more details)

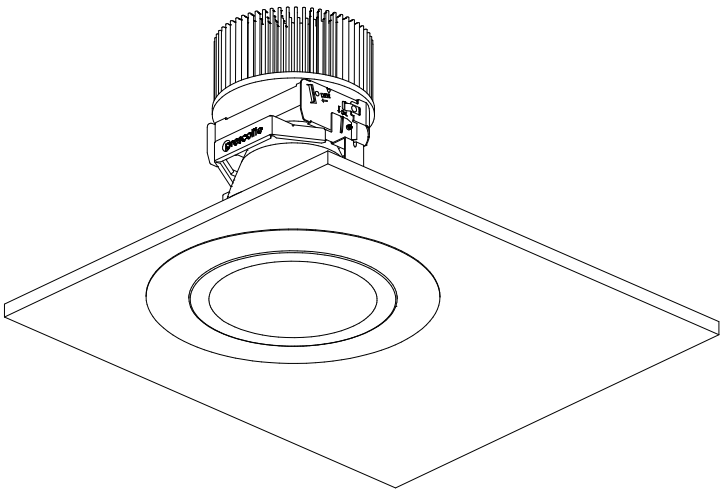

© 2026 HLI Solutions, Inc. All rights reserved. Information and specifications subject to change without notice. All values are design or typical values when measured under laboratory conditions.

prescolite

DATE: LOCATION:

TYPE: PROJECT:

CATALOG #:

LFR-6RW

LITEFRAME 6" ROUND LENSED WALL WASH

PHOTOMETRY

LFR-6RW-M-20L35K9LWW-DM1 / LFR-6RW-T-LWW-S

LUMINAIRE DATA

Test No.	**25.00739**
Description	**2000 lm, Lensed Wall Wash, 3500K, 90 CRI**
Delivered Lumens	**1653**
Watts	**14.2W**
Efficacy	**116**
Mounting	**Recessed**

POLAR GRAPH

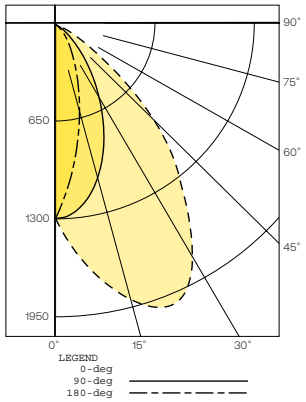

CANDELA DISTRIBUTION

Degree	Candela
0	1287
5	1514
15	1886
25	1981
35	1503
45	934
55	323
65	81
75	13
85	0
90	0

LUMINANCE DATA*

Vertical Angle	Average
45°	72411
55°	30871
65°	10507
75°	2754
85°	0

*Candela/Square Meter

ZONAL LUMEN SUMMARY

Zone	Lumens	% Luminaire
0–40	1250	75.7
0–60	1618	97.9
0–90	1653	100.0
0–180	1653	100.0

LUMEN MULTIPLIER

Option	27K9	30K9	35K9	40K9	50K9
Multiplier	0.94	0.98	1.00	1.01	1.02

Photometrics are published at a nominal 3500 Kelvin, 90+ CRI. This table may be used to approximate the lumen values at different Kelvin temperatures. Power consumption would stay the same.

REFLECTOR FINISH MULTIPLIER (Based on Clear (Standard) Color)

Option	Specular (S)	Semi-Specular (SS)	White Cone (WC)
Multiplier	1	0.909	0.984

TM-30 DATA

COLOR VECTOR GRAPHIC
3500K, 90 CRI

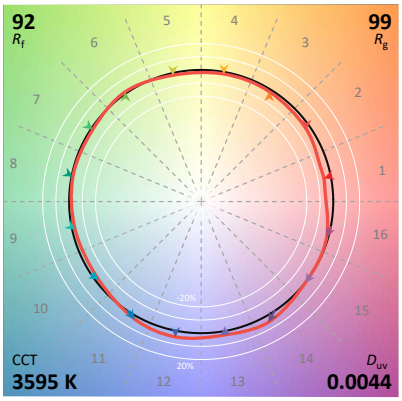

TEST RESULTS - 3500K	
Value	90+ CRI
R_f	92
R_g	99
CCT (K)	3595
D_{UV}	0.0044
x	0.4045
y	0.4004
CIE R_a	93
CIE R_9	61

© 2026 HLI Solutions, Inc. All rights reserved. Information and specifications subject to change without notice. All values are design or typical values when measured under laboratory conditions.

LFR-6RW

LITEFRAME 6" ROUND LENSED WALL WASH

ELECTRICAL DATA

DRIVER DATA		
Input Voltage	120–277 V	347 V
Input Frequency	50/60 Hz	50/60 Hz
Power Factor	≥0.90	≥0.90
THD	<20%	<20%
EMI Filtering (FCC 47 CFR Part 15)	Class A	Class A

* Values for DM1 option shown, values for other dimming options may vary.

ADDITIONAL INFORMATION

Dimming Compatibility

For more details and recommended dimmer list, see Dimming Compatibility Information on currentlighting.com/prescolite.

DMX

See instruction sheet on currentlighting.com/prescolite for connection & installation information.

Central Inverters

For full fixture output in back-up mode, we recommend you visit currentlighting.com/dual-lite for your Central Lighting Inverter options.
Please contact your local Current representative for any assistance with proper sizing and loading of your inverter selection.
Central lighting inverters must be ordered separately.

Lumen Output in Emergency Mode

To determine the lumen output in emergency mode, multiply the battery pack wattage by the fixture lumens per watt (LPW).
For example, 10W x 120 LPW = 1200 lumens in emergency mode.

© 2026 HLI Solutions, Inc. All rights reserved. Information and specifications subject to change without notice. All values are design or typical values when measured under laboratory conditions.