prescolite

DATE: LOCATION:

TYPE: PROJECT:

CATALOG #:

LFR-6RA SpectraSync

LITEFRAME 6" ROUND ADJUSTABLE WITH COLOR TUNING

LITEFRAME 2.0



FEATURES

- 6” LED adjustable accent delivering 1000–3000 lumens
- Direct Install from below ceiling for New Construction or Remodel applications, optional IC and CP housing accessories available
- Select from Angle Cut Cone, Pinhole or Slot trim styles
- Available in four beam distributions
- Precise hot aiming/locking 0–40° tilt, full 361° rotation
- SpectraSync™ Color Tuning technology allows the flexibility to tailor CCT to aesthetic preferences
- Available in Dim to Warm (2200K–3000K) or Tunable White (2700K–5000K or 2700K–6500K), 90+ CRI
- NX Lighting Controls wired and wireless controls capability available

C US WET LOCATION

With CL Lens Option

SERVICE PROGRAMS

STOCK

CONTROLS TECHNOLOGY

NX WIRELESS NX WIRED SpectraSync™ Color Tuning Technology

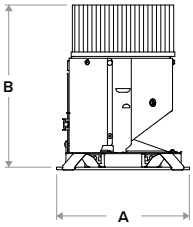

Typical Dimensions and Weights			
Lumen Package	"A" Diameter Inches (mm)	"B" Height Inches (mm)	Weight lbs (kg)
10L - 30L	7.13 (181)	7.51 (191)	5.8 (2.6)

See DIMENSIONS section for complete details

SPECIFICATIONS

CONSTRUCTION

- Standard Fixture Module designed for Non-IC, Direct Install construction
- Optional Non-IC frame, IC or CP housing available with pre-installed bar hangers
- Die cast aluminum fixture module support ring with spring steel clips for secure mounting to ceiling
- Driver J-Box can be installed and accessed from below the ceiling as direct install or easily snap on to optional housing frame/enclosures
- Light Engine connections use plenum rated (CMP) cable

OPTICS

- Manual friction adjustment with angle indicator and thumbscrew lock for precise hot aiming
- Vertical Tilt: 40° (≤ 0.75” ceiling thickness); 30° (up to 1.25” ceiling thickness)
- Smooth 361° horizontal rotation with locking screw
- Multiple beam distributions allow dramatic effects with minimal occlusion
- High purity spun aluminum reflector, self-flanged
- Standard Angle Cut cone in Specular or Semi-Specular anodized or White with painted flange options
- Optional Pinhole or Slot trim styles available in White or Black

ELECTRICAL

- LED array with 3 SDCM color consistency
- Dim to Warm (2200K–3000K) or Tunable White (2700K–5000K or 2700K–6500K) options available
- 90+ CRI standard
- Long LED life: L70 at >60,000 hours (TM-21)
- Universal voltage 120V–277V driver
- UL Class 2, inherent short circuit and overload protection, RoHS compliant
- Flicker free 0–10V dimming to 5%
- NX Lighting Controls provides options for standalone and networked functionality with wired or wireless connectivity for NX system deployments
- Emergency battery pack option available with remote test switch and indicator light

INSTALLATION

- Accommodates ceiling thickness from 0.50" to 1.25"
- Fixture Module including driver fully accessible from above or below the ceiling
- 10L Fixture Modules are inherently protected IC without the use of IC housing enclosure. (IC housing is still recommended when using loose-fill or spray foam insulation types.)
- Chicago Plenum requires CP housing option

CERTIFICATIONS

- cCSAus certified to UL 1598
- Suitable for damp locations
- EMR: Certified under UL 924 standard for emergency lighting and power equipment
- EMR: Emergency battery packs are California Energy Commission (CEC) Title 20 Compliant
- Approved for 8 (4 in/4 out) No. 12AWG conductors rated for 90°C through wiring

WARRANTY

- 5 year warranty

KEY DATA	
Lumen Range	1000–3000
Wattage Range	12–42
Efficacy Range (LPW)	56–78
Reported Life (Hours)	L70 / >60,000
Input Current (mA)	100–350 (120V)

*Based on Specular, 30K, 90 CRI

© 2023 HLI Solutions, Inc. All rights reserved. Information and specifications subject to change without notice. All values are design or typical values when measured under laboratory conditions.

prescolite

DATE: LOCATION:

TYPE: PROJECT:

CATALOG #:

LFR-6RA SpectraSync

LITEFRAME 6" ROUND ADJUSTABLE WITH COLOR TUNING

Gray Shading = Service Program STOCK

ORDERING GUIDE

Example: LFR–6RA–M–10L2230TD9–WD–DMTW / LFR–6RA–T–S / LFR–6RD–H

CATALOG #

FIXTURE MODULE

LFR-6RA-M –

Ap/Shp/Funct	Lumen Output	CCT	CRI	Distribution	Driver Options	Control Options	Voltage	Module Options
LFR-6RA-M 6" Round Adjustable Fixture Module for Direct Install *(Non-IC frame, IC or CP housings available under Housing Options below)*	**10L** 1000 **15L** 1500 **20L** 2000 **25L** 2500 **30L** 3000	**2230TD** 2200K–3000K SpectraSync™ Dim to Warm **2750T** 2700K–5000K SpectraSync™ Tunable White **2765T** 2700K–6500K SpectraSync™ Tunable White	**9** 90+	**NR** Narrow (25°) **MD** Medium (35°) **WD** Wide (45°)	**DMTW** SpectraSync™ Dim to Warm, 0–10V Dimming to 5% [1] **DMT** SpectraSync™ Tunable White, 0–10V Dimming to 5% [2]	**NX Lighting Controls** Networked Wireless **NXW** NX Networked Wireless Radio Module NXRM2 and Bluetooth Programming, without Sensor Networked Wired **NXE** NX Wired Dual RJ45 SmartPORTS, without Sensor	*Standard 120–277V*	**EMR** 6W Emergency Battery Pack (CEC Title 20 Compliant) with remote test switch and indicator light [3] **DTS** Device Transfer Switch with Dimming Bypass [3]

TRIM (Ships separately)

LFR-6RA-T –

Aperture/Shape/Function	Trim Style	Reflector Finish/Color	Flange Color Options
LFR-6RA-T 6" Round Adjustable Trim Assembly	*Standard Cut Cone* **PH** Pinhole [4] **SLT** Slot [4]	**S** Specular **SS** Semi-Specular **WC** Painted White Cone and Flange	*Standard matches reflector color* **WT** White Flange [5] **BT** Black Flange

HOUSING OPTIONS (Ships separately)

Aperture/Shape/Function	
☐ **LFR-6RD-H**	6" Housing Frame, New Construction, Non-IC
☐ **LFR-6RD-H-IC**	6" Housing Enclosure, New Construction, IC Rated [6, 7]
☐ **LFR-6RD-H-CP**	6" Housing Enclosure, New Construction, Chicago Plenum [8]

Accessories	
☐ **LiteGear**	LiteGear® Inverter, 125VA–250VA
☐ **LPS Series**	LightPower Micro-Inverter, 20VA–55VA
☐ **LF-MOR6-R-WH**	Metal Oversized Ring, 6" Round, White (10.12" outside diameter)

Notes:

1 Must select 2230TD with DMTW driver.
2 Must select either 2750T or 2765T with DMT driver.
3 Module options not available in combination.
4 PH and SLT available in painted reflector/flange only. Must specify WT or BT.
5 WT not needed for WC.
6 IC available up to 25L; 10L Fixture Modules are inherently protected IC without the use of IC housing enclosure. (IC housing is still recommended when using loose-fill or spray foam insulation types.)
7 IC housing not available for use in combination with Controls or with Module options EMR, DTS.
8 CP available up to 25L; not available with Controls or EMR options.

© 2023 HLI Solutions, Inc. All rights reserved. Information and specifications subject to change without notice. All values are design or typical values when measured under laboratory conditions.

DATE: LOCATION:

TYPE: PROJECT:

CATALOG #:

LFR-6RA SpectraSync

LITEFRAME 6" ROUND ADJUSTABLE WITH COLOR TUNING

NX LIGHTING CONTROLS

	Control Option Ordering Logic & Description		Control Option Functionality								Control Option Components	
			Networkable	Grouping	Scheduling	Occupancy/ Motion	Daylight Harvesting	0-10V Dimming	On/Off Control	Bluetooth App Programming		
NX Wireless	NXW	NX Networked Wireless Radio Module NXRM2 and Bluetooth Programming, without Sensor	✓	✓	✓	–	–	✓	✓	✓		NXRM2-H
NX Wired	NXE	NX Wired Dual RJ45 SmartPORTS, without Sensor	✓	✓	✓	–	–	✓	✓	✓[1]		NXDSP

1 Requires NXBTC, order separately.

NX LIGHTING CONTROLS APP



The NX Lighting Controls App is a free to use mobile application for programming both an NX Lighting Controls System or Standalone Bluetooth Sensors. The mobile app allows you to configure devices, discover and setup wireless enabled luminaires and program your NX system settings.

Android

Apple iOS

© 2023 HLI Solutions, Inc. All rights reserved. Information and specifications subject to change without notice. All values are design or typical values when measured under laboratory conditions.

prescolite

DATE: LOCATION:

TYPE: PROJECT:

CATALOG #:

LFR-6RA SpectraSync

LITEFRAME 6" ROUND ADJUSTABLE WITH COLOR TUNING

SPECTRASYNC™ COLOR TUNING TECHNOLOGY

Control your space based on the needs of the application, specific activities throughout the day and preferences of the occupants with distinct SpectraSync™ Color Tuning Technologies.

SpectraSync™ Color Tuning Technology

SPECTRASYNC COLOR TUNING TECHNOLOGY		
Mode	Kelvin Range	Description
Dim to Warm	2200K-3000K	Mimics the familiar warming effect that occurs with traditional incandescent sources as they are dimmed
Tunable White	2700K-5000K 2700K-6500K	Offers users the ability to tailor CCT to their personal preference, enhancing task visibility, material and colors or the aesthetics of the space
Scheduled White	2700K-5000K 2700K-6500K	Mimics the rhythm of natural light or follows an alternative user-defined schedule throughout the day, enhancing an occupant's mood and well-being

SpectraSync Tunable White

Available in two options: 2750T (2700K–5000K) or 2765T (2700K–6500K).
Requires two 0–10V controllers, one for intensity and one for CCT.
Minimum 5% dimming.

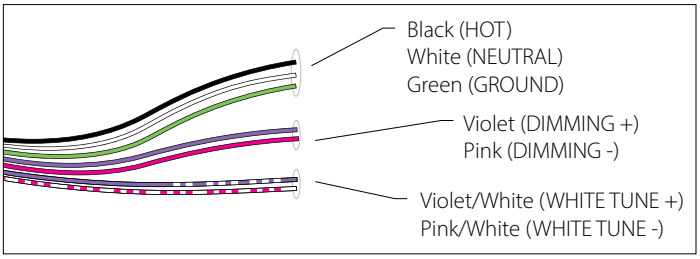

SpectraSync Tunable White luminaires are provided with two 0–10V circuits. The violet and pink circuit is for wiring to any qualified 0–10V controller for dimming. The violet/white and pink/white circuit is for wiring to any qualified 0–10V controller for Tunable White CCT control.

Controller Manufacturer Data

SpectraSync Tunable White was designed to be used with sinking style dimmers (provided by others) and is compatible with:

- Current: NX Lighting Controls Room Controllers (NXRC) and In-fixture Controllers (NXFM)
- Lutron: DVTV, DVSTV, and NFTV dimmers
- Wattstopper: ADF120277 and CD4BL (Titan) dimmers

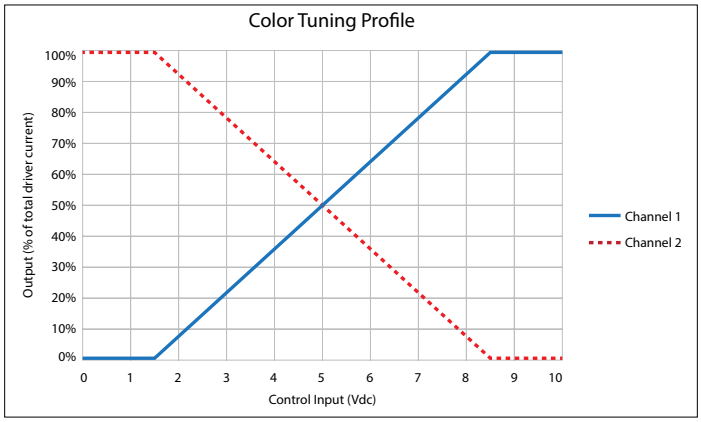

To enable scheduling and for use with NX wall control preset stations please refer to SpectraSync technical sheet.

PERFORMANCE SUMMARY

Performance data provided below is for 2230TD, 90 CRI with Specular Clear reflector finish/color

Lumen Package	Nominal Lumens	Distribution	Delivered Lumens	Watts	LPW
10L	1000	Narrow	927	11.9	78
		Medium	867	11.9	73
		Wide	778	11.9	65
15L	1500	Narrow	1134	18.3	62
		Medium	1060	18.3	58
		Wide	951	18.3	52
20L	20000	Narrow	1881	25.2	75
		Medium	1760	25.2	70
		Wide	1578	25.2	63
25L	2500	Narrow	2350	33.0	71
		Medium	2199	33.0	67
		Wide	1972	33.0	60
30L	3000	Narrow	2824	42.0	67
		Medium	2642	42.0	63
		Wide	2369	42.0	56

© 2023 HLI Solutions, Inc. All rights reserved. Information and specifications subject to change without notice. All values are design or typical values when measured under laboratory conditions.

prescolite

DATE: LOCATION:

TYPE: PROJECT:

CATALOG #:

LFR-6RA SpectraSync

LITEFRAME 6" ROUND ADJUSTABLE WITH COLOR TUNING

DIMENSIONS

LFR-6RA-M

Fixture Module consists of Light Engine and Driver J-Box assemblies.
Overall dimensions for each are dependent upon configuration selected.
See the following pages for details.

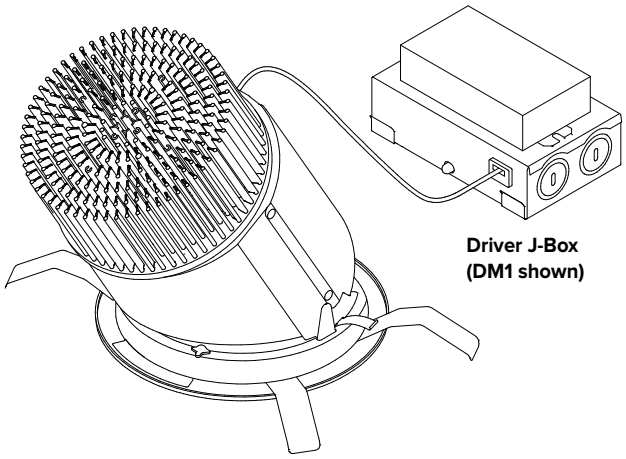

Driver J-Box (DM1 shown)

Light Engine with Trim assembly installed

DIMENSIONAL DATA	
APERTURE	Ø 5.75" (146.1mm)
OVERALL	Ø 7.13" (181.0mm)
FLANGE WIDTH	0.71" (18.0mm)
CEILING CUTOUT	Ø 6.50" (165.1mm)
CEILING THICKNESS	0.50"–1.25" (12.7–31.8mm)

LFR-6RA LIGHT ENGINE

OVERALL LIGHT ENGINE HEIGHT "A" *	
LUMEN PACKAGE	NR / MD/ WD
10L–30L	7.51" (190.7mm)

* Note: Add ½" minimum plenum clearance above overall Light Engine Height.
** Non-IC rating requires 3" from insulation and combustible materials.

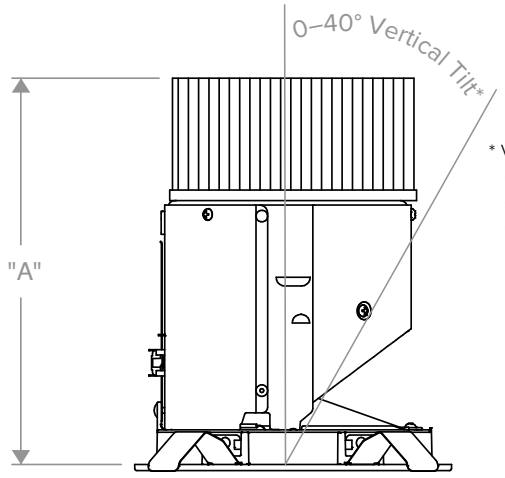

* Vertical Tilt:
0–40° up to 0.75" ceiling thickness
0–35° for 0.75" to 1" ceiling thickness
0–30° for 1" to 1.25" ceiling thickness

Side View Standard

© 2023 HLI Solutions, Inc. All rights reserved. Information and specifications subject to change without notice. All values are design or typical values when measured under laboratory conditions.

LFR-6RA SpectraSync

LITEFRAME 6" ROUND ADJUSTABLE WITH COLOR TUNING

DIMENSIONS CONTINUED

DRIVER J-BOX

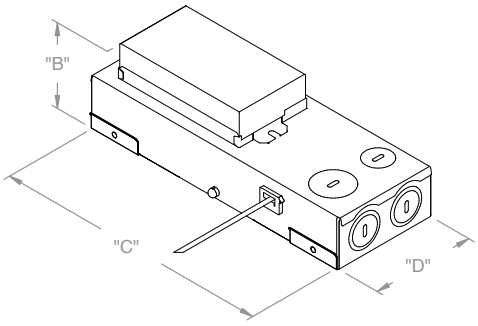

DMT/DMTW

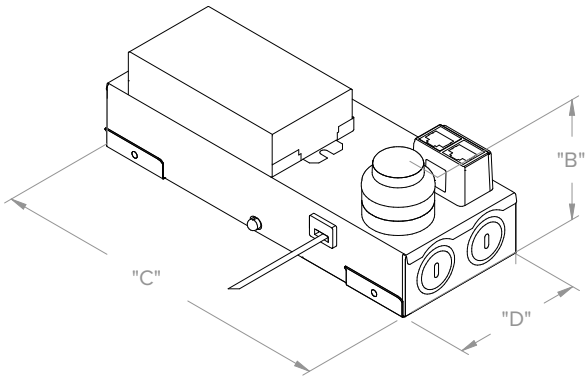

NX CONTROLS OPTION

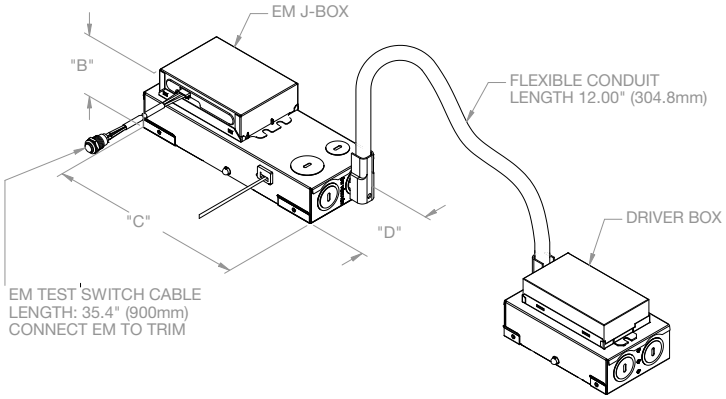

DMT/DMTW EM/EMR OPTION

EMR/Driver J-Box Conduit (provided) connects to Driver J-Box
(see Driver J-Box for additional details)

OVERALL DRIVER J-BOX DIMENSIONS (ALL LUMEN OUTPUTS)				
DRIVER/ CONTROLS OPTIONS	"B" (HEIGHT)	"C" (LENGTH)	"D" (WIDTH)	MINIMUM J-BOX PLENUM CLEARANCE
DMT/DMTW	2.67" (67.8mm)	8.68" (220.5mm)	3.23" (82.0mm)	3.00" (76.2mm)
NX	3.02" (76.7mm)	8.68" (220.5mm)	3.23" (82.0mm)	3.75" (95.3mm)
EM	2.73" (69.3mm)	8.68" (220.5mm)	3.23" (82.0mm)	3.00" (76.2mm)
CP	1.89" (73.4mm)	6.50" (165.1mm)	2.72" (69.1mm)	3.00" (76.2mm)

© 2023 HLI Solutions, Inc. All rights reserved. Information and specifications subject to change without notice. All values are design or typical values when measured under laboratory conditions.

prescolite

LFR-6RA SpectraSync

LITEFRAME 6" ROUND ADJUSTABLE WITH COLOR TUNING

DATE: LOCATION:

TYPE: PROJECT:

CATALOG #:

DIMENSIONS CONTINUED

OPTIONAL HOUSINGS

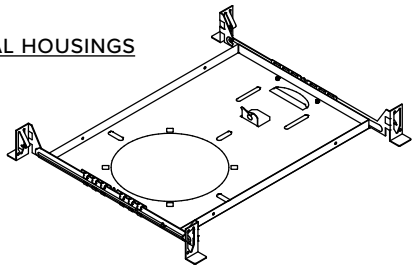

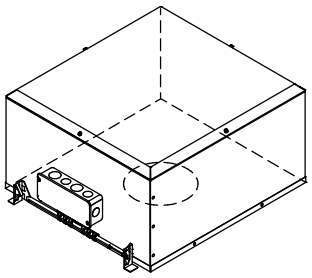

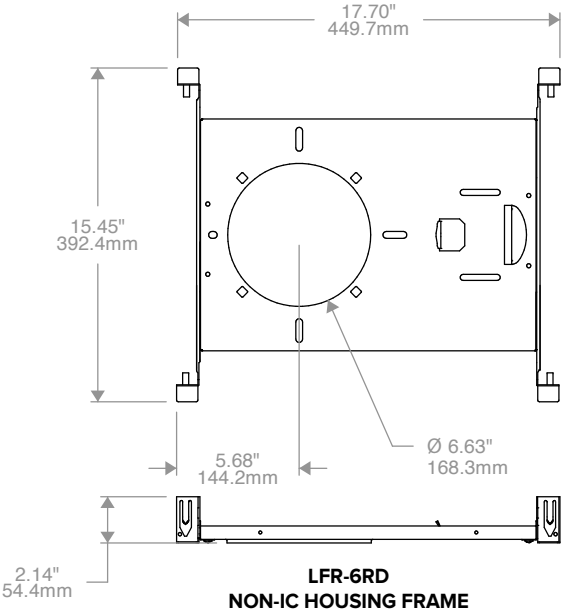

LFR-6RD
NON-IC HOUSING FRAME

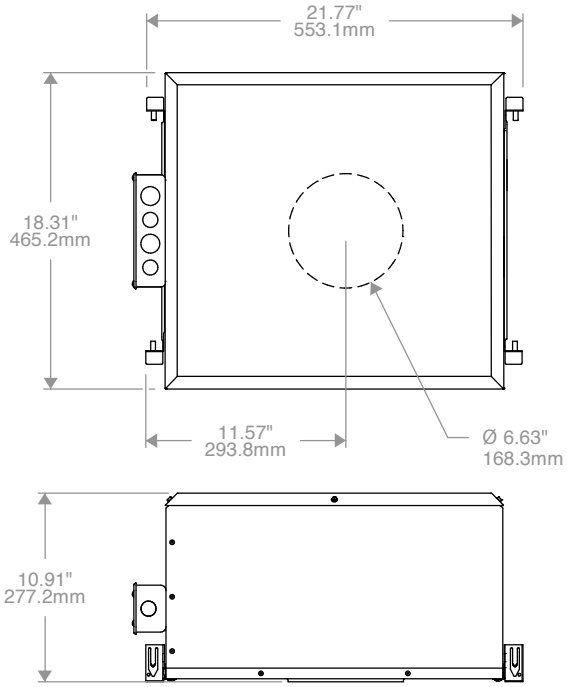

LFR-6RD-H-IC
LFR-6RD-H-CP
IC or CP HOUSING

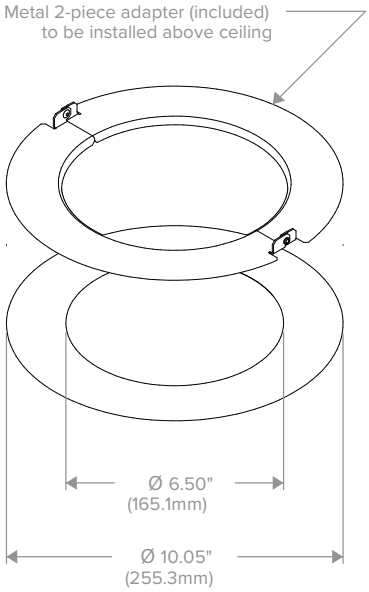

ROUND LF-MOR6-R
METAL OVERSIZED RING
(See LF-MOR Installation Instruction for more details)

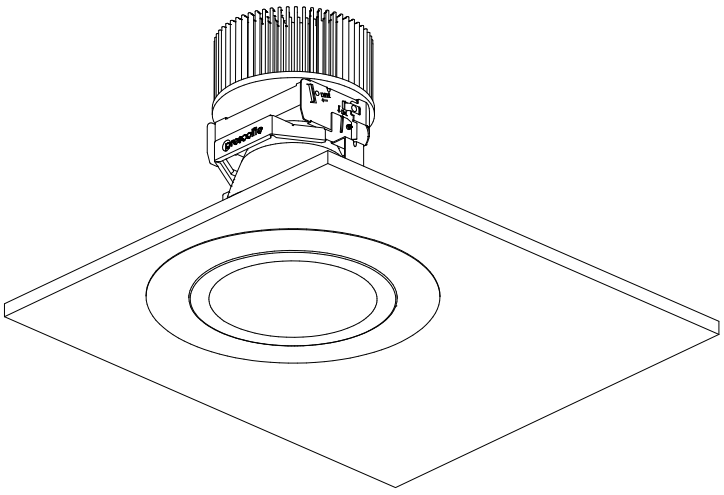

© 2023 HLI Solutions, Inc. All rights reserved. Information and specifications subject to change without notice. All values are design or typical values when measured under laboratory conditions.

prescolite

DATE: LOCATION:

TYPE: PROJECT:

CATALOG #:

LFR-6RA SpectraSync

LITEFRAME 6" ROUND ADJUSTABLE WITH COLOR TUNING

PHOTOMETRY

LFR-6RA-M-20L2230TD9NR-DMT / LFR-6RA-T-S

LUMINAIRE DATA

Test No.	**22.00524**
Description	**2000 lm, Narrow, 3500K, 90 CRI**
Delivered Lumens	**1881**
Watts	**25.2W**
Efficacy	**75**
Mounting	**Recessed**
Beam Angle (FWHM)	**24**

ZONAL LUMEN SUMMARY

Zone	Lumens	% Luminaire
0-40	1662	88.3
0-60	1878	99.8
0-90	1881	100.0
0-180	1881	100.0

POLAR GRAPH

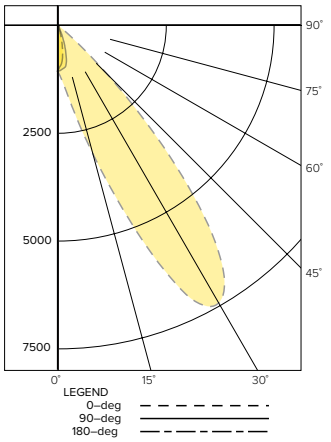

CANDELA DISTRIBUTION

Degree	Candela
0	1068
5	1319
15	3012
25	6754
35	6577
45	1767
55	86
65	18
75	0
85	0
90	0

LUMINANCE DATA*

Vertical Angle	Average
45°	149162
55°	8950
65°	2542
75°	0
85°	0

*Candela/Square Meter

LFR-6RA-M-20L2230TD9MD-DMT / LFR-6RA-T-S

LUMINAIRE DATA

Test No.	**22.00525**
Description	**2000 lm, Medium, 3500K, 90 CRI**
Delivered Lumens	**1760**
Watts	**25.2W**
Efficacy	**70**
Mounting	**Recessed**
Beam Angle (FWHM)	**33**

ZONAL LUMEN SUMMARY

Zone	Lumens	% Luminaire
0-40	1500	85.3
0-60	1756	99.8
0-90	1760	100.0
0-180	1760	100.0

POLAR GRAPH

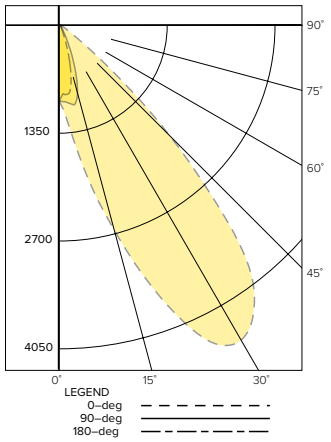

CANDELA DISTRIBUTION

Degree	Candela
0	956
5	1243
15	2677
25	4355
35	4258
45	1888
55	109
65	20
75	0
85	0
90	0

LUMINANCE DATA*

Vertical Angle	Average
45°	159376
55°	11343
65°	2825
75°	0
85°	0

*Candela/Square Meter

LFR-6RA-M-20L2230TD9WD-DMT / LFR-6RA-T-S

LUMINAIRE DATA

Test No.	**22.00526**
Description	**2000 lm, Wide, 3500K, 90 CRI**
Delivered Lumens	**1576**
Watts	**25.2W**
Efficacy	**63**
Mounting	**Recessed**
Beam Angle (FWHM)	**48**

ZONAL LUMEN SUMMARY

Zone	Lumens	% Luminaire
0-40	1234	78.2
0-60	1569	99.4
0-90	1578	100.0
0-180	1578	100.0

POLAR GRAPH

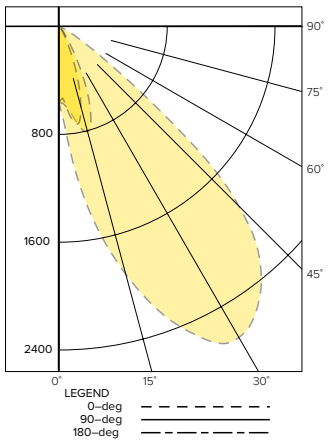

CANDELA DISTRIBUTION

Degree	Candela
0	560
5	914
15	1898
25	2561
35	2561
45	1891
55	342
65	47
75	0
85	0
90	0

LUMINANCE DATA*

Vertical Angle	Average
45°	159630
55°	35591
65°	6638
75°	0
85°	0

*Candela/Square Meter

LUMEN MULTIPLIER

Option	27K8	30K8	35K8	40K8	50K8	27K9	30K9	35K9	40K9	50K9
Multiplier	0.93	0.96	1.00	1.01	1.03	0.78	0.82	0.85	0.87	0.89

Photometrics are published above at a nominal 3500 Kelvin, 80+ CRI. This table may be used to approximate the lumen values at different Kelvin temperatures. Power consumption would stay the same.

© 2023 HLI Solutions, Inc. All rights reserved. Information and specifications subject to change without notice. All values are design or typical values when measured under laboratory conditions.

LFR-6RA SpectraSync

LITEFRAME 6" ROUND ADJUSTABLE WITH COLOR TUNING

TM-30 DATA

SPECTRASYNC™ TUNABLE WHITE (2765T)

COLOR VECTOR GRAPHIC 2700K, 90+ CRI

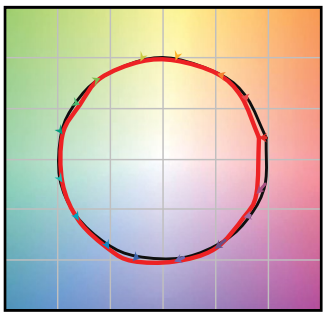

Reference Illuminant — Test Source

COLOR DISTORTION GRAPHIC 2700K, 90+ CRI



TEST RESULTS - TUNABLE WHITE @ 1500 LUMENS (NOMINAL)			
Value	2700K	4600K	6500K
Luminous Flux (lm)	1469	1779	1692
Wattage (W)	20.5	20.1	20.6
Efficacy (lm/W)	71.7	88.5	82.1
R_f	90	89	87
R_g	97	99	97
CCT (K)	2799	4177	7184
D_{UV}	0.0032	0.0088	0.0024
x	0.4468	0.3680	0.3047
y	0.3992	0.3515	0.3109
CIE R_a	90	94	94
CIE R_9	46.7	85.4	87.7

COLOR VECTOR GRAPHIC 4600K, 90+ CRI

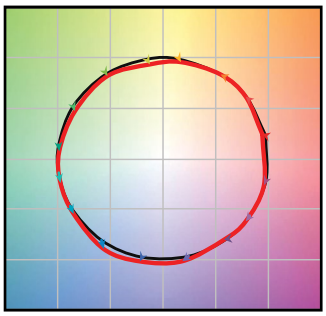

Reference Illuminant — Test Source

COLOR DISTORTION GRAPHIC 4600K, 90+ CRI



COLOR VECTOR GRAPHIC 6500K, 90+ CRI

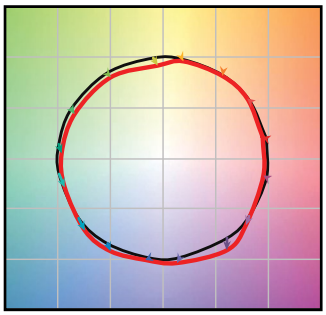

Reference Illuminant — Test Source

COLOR DISTORTION GRAPHIC 6500K, 90+ CRI



© 2023 HLI Solutions, Inc. All rights reserved. Information and specifications subject to change without notice. All values are design or typical values when measured under laboratory conditions.

LFR-6RA SpectraSync

LITEFRAME 6" ROUND ADJUSTABLE WITH COLOR TUNING

TM-30 DATA CONTINUED

SPECTRASYNC™ DIM TO WARM (2230TD)

COLOR VECTOR GRAPHIC 3000K, 90+ CRI @ 100%

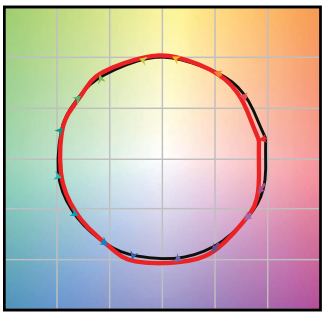

Reference Illuminant — Test Source

COLOR DISTORTION GRAPHIC 3000K, 90+ CRI @ 100%

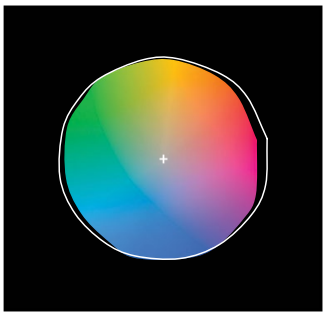

TEST RESULTS - DIM TO WARM @ 3 DIMMING LEVELS			
Value	100%	50% Dim	5% Dim
Luminous Flux (lm)	1470	833	50
Wattage (W)	20.3	20.1	20.6
Efficacy (lm/W)	71.7	88.5	82.1
R_f	90	89	87
R_g	97	99	97
CCT (K)	2799	4177	7184
D_{uv}	0.0032	0.0088	0.0024
x	0.4468	0.3680	0.3047
y	0.3992	0.3515	0.3109
CIE R_a	90	94	94
CIE R_9	46.7	85.4	87.7

COLOR VECTOR GRAPHIC 2600K, 90 CRI @ 50% DIM

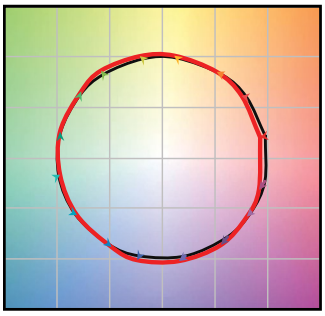

Reference Illuminant — Test Source

COLOR DISTORTION GRAPHIC 2600K, 90 CRI @ 50% DIM



COLOR VECTOR GRAPHIC 2200K, 90 CRI @ 5% DIM

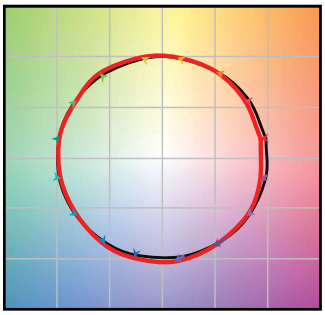

Reference Illuminant — Test Source

COLOR DISTORTION GRAPHIC 2200K, 90 CRI @ 5% DIM



© 2023 HLI Solutions, Inc. All rights reserved. Information and specifications subject to change without notice. All values are design or typical values when measured under laboratory conditions.

prescolite

DATE: LOCATION:

TYPE: PROJECT:

CATALOG #:

LFR-6RA SpectraSync

LITEFRAME 6" ROUND ADJUSTABLE WITH COLOR TUNING

ELECTRICAL DATA

DRIVER DATA	
Input Voltage	120–277 V
Input Frequency	50/60 Hz
Power Factor	≥0.90
THD	<20%
EMI Filtering (FCC 47 CFR Part 15)	Class A

* Values for DM1 option shown, values for other dimming options may vary.

ADDITIONAL INFORMATION

Dimming Compatibility

For more details and recommended dimmer list, see Dimming Compatibility Information on currentlighting.com/prescolite.

Central Inverters

For full fixture output in back-up mode, we recommend you visit currentlighting.com/dual-lite for your Central Lighting Inverter options. Please contact your local Current representative for any assistance with proper sizing and loading of your inverter selection. Central lighting inverters must be ordered separately.

Lumen Output in Emergency Mode

To determine the lumen output in emergency mode, multiply the battery pack wattage by the fixture lumens per watt (LPW).
For example, 6W x 120 LPW = 720 lumens in emergency mode.

© 2023 HLI Solutions, Inc. All rights reserved. Information and specifications subject to change without notice. All values are design or typical values when measured under laboratory conditions.