alphabet

PROJECT INFORMATION			
JOB NAME		TYPE	
ORDERING CODE			

NU1

1" Round Wall Wash Warm Dim

NSF · AT airtight · PR plenum rated · wet rated

WW BEAM (Note: Specifications are subject to change without notice)			
6mm COB PERFORMANCE DATA			
LED LIGHT ENGINE	NOMINAL DELIVERED LUMENS	DRIVE CURRENT	LED WATTAGE
05LM	320LM @30K/97CRI	175mA	6.5W
07LM	490LM @30K/97CRI	275mA	10W
Notes	Delivered lumens based on WW optic		



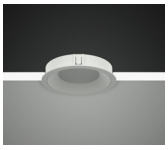

Trim

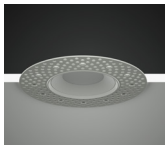

Trimless



Trimless Millwork

FEATURES

- Light uniformity from ceiling line to floor with no scalloping
- 3' set back with 3' on center spacing – 18 FC average (10' AFF)
- Placement of light intensity at any desired wall location
- Wide range of spacing flexible provides ability to navigate ceiling obstructions

DIMMING AND CONTROLS

- eldoLED flicker free 0-10V dimming to 0% and 1%
- eldoLED flicker free DALI 2 dimming to 0% and 1%
- Lutron Hi-lume Eco System dimming to 0.1% and 1.%
- Leading & trailing edge (Triac/ELV) dimming to 1%
- All driver offerings are remote with above ceiling access, see page 3 for details.
- Refer to DX remote panels for additional options.

CONSTRUCTION

- High-grade die-cast and cold forged aluminum alloy assembly that has superior thermal and corrosion resistance properties.
- Shatter proof acrylic bezel lens
- Electrocoated 16-gauge cold-rolled steel construction
- Accommodates ceiling thickness from 1/8" to 1-1/2", On-field thick ceiling adjustment, see page 7
- Fixture is pre-set and shipped at 30deg tilt

LED

- Luminus Dim-to-warm COB:
  97 CRI: SDCM = 3-step MacAdam Ellipse, Lumen Maintenance: L_{70} > 54,000 hrs

LISTING

- ULus Listed to UL1598 & UL2108; cUL Listed to CSA C22.2 #250.0
- IP44 with lens - Suitable for wet locations with lens - Suitable for damp locations without lens
- NSF/ANSI-2 with lens (Non-Food and Splash Zones)
- **Declare.** - LBC Red List Approved
- 5 Year Limited warranty

ELECTRICAL

- Low voltage luminaire: 36Vdc nominal
- 05LM - 175mA
- 07LM - 275mA

FIXTURE HEIGHT

LED LIGHT ENGINE: 05LM - 07LM

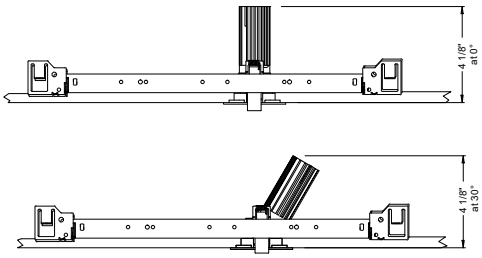

TRIMMED

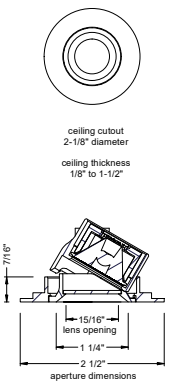

TRIMLESS

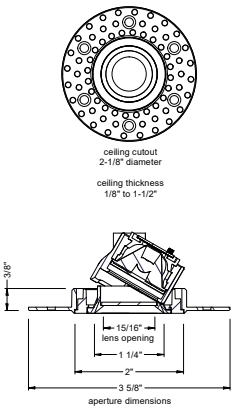

MILLWORK

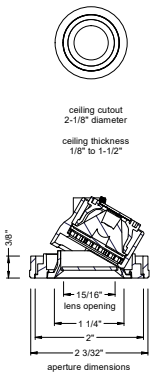

alphabet

PROJECT INFORMATION			
JOB NAME		TYPE	
ORDERING CODE			

WW BEAM ORDERING CODE

SERIES	**NU1**	NU1
TYPE	**RW**	round wall wash
	RWT	round wall wash trimless
	RWTMW	round wall wash trimless millwork
LED	**WD**	warm dim (Luminus)
DELIVERED LUMENS	**05LM**	320 lm
	07LM	490 lm
	Standard Configuration: 3000K 97CRI **Calculated Delivered Lumens** = [Delivered Lumen Value] x [CCT Multiplier]	
CCT	**3018**	3000K, dim to 1800K

CCT at Light Level (%LF)

%LF	07LM	05LM
100%	3000	3000
50%	3000	3000
25%	2800	2800
10%	2200	2200
5%	1800	1800

CRI	**97**	97 CRI
OPTIC & LM MULTIPLIER SEE PAGE 5	**WW**	wall wash with diffused angle bending lens
TRIM COLOR SEE PAGE 2	**BK**	black
	WH	white
	MC	matte chrome
	BZ	bronze
	CC[1]	custom color, consult factory for details
	Antimicrobial finish, add **AM** to black, white or matte chrome i.e. BKAM.	
	Not applicable to trimless option. Do not include in trimless ordering code.	
BEZEL COLOR SEE PAGE 2	**BK**	black (0.98)
	WH	white (1.00)
	MC	matte chrome (0.99)
	BZ	bronze (0.98)
	CC[1]	custom color, consult factory for details
	Antimicrobial finish, add **AM** to black, white or matte chrome i.e. BKAM.	

WW BEAM ORDERING CODE

MOUNTING OPTIONS SEE PAGE 6, 7	**NC**	new construction plate
	NCINH[2]	new construction with ceiling fitting plate, IC rated, inherently protected
	IC[2]	insulation contact housing
	ICAT[2]	insulation contact/airtight housing
	CP[2]	chicago plenum housing
	RET	retrofit, no ceiling plate
	RETINH[2]	retrofit, no ceiling fitting plate, IC rated, inherently protected
	remote driver housing only	
VOLTAGE	**LVL**	low voltage luminaire
DIMMING	**ND**	No Driver Included. Customer to supply PoE system components or order remote driver separately. Refer to PoE/Remote Driver reference sheet for additional details.

ADDITIONAL MOUNTING INFO

New Construction Bar Hangers (included)	Mounting Length: 14-3/4" to 26"
Extension Kit p/n: K20266 (ordered separately, 1 per fixture)	*Extends a pair of Bar Hangers* Total Mounting Length: 29" to 48"

YOUR COMPLETED ORDERING CODE

Follow the steps to specify your fixture, example:

NU1 - RW - WD - 07LM - 3018 - 97 - WW - WH - WH - NC - LVL - ND

NOTES

1. Custom set up fee plus minimum quantity required per color.
2. IC/ICAT/CP/NCINH/RETINH available in 05LM.

TRIM OPTIONS

TRIM/BEZEL COLORS



WH



MC



BK



BZ

alphabet

PROJECT INFORMATION			
JOB NAME		TYPE	
ORDERING CODE			

REMOTE DRIVER - ORDERING CODE		
SERIES	DX-C	compact driver box
NUMBER OF DRIVERS	1-5	number of drivers, 1-5
CURRENT	175	175mA
	275	275mA
VOLTAGE	120	120V
	UNV	120V-277V
DIMMING	DIM10	eldoLED flicker free 0-10V dim to 1%
	DIM10Z	eldoLED flicker free 0-10V dim 0.1%
	DALI	eldoLED flicker free DALI-2 dim to 1%
	DALIZ	eldoLED flicker free DALI-2 dim to 0.1%
	DMX-RJ45[1]	DMX control dimming to 0.1% with RJ45 connection
	DMX-WL[1]	DMX-512/RDM dim to 0% with lead wire input
	DMX-XLR[1]	DMX-512/RDM dim to 0% with XLR input
	LUT	Lutron Hi-lume Ecosystem dimming to 1%, Soft-on & Fade-to-Black
	LUTP	Lutron Hi-Lume Eco (fade) dim to 0.1%
	ELV1[2]	leading edge & trailing edge (Triac/ELV) dim to 1%
	NLT	nLight control interface: Cat-5/RJ45, dim to off
	CAS[3]	Casambi control with flicker free 1% dimming
	AWNR[4]	lutron athena wireless node
ELECTRICAL OPTIONS	EM7[5]	remote emergency battery backup, 90 minutes at 7 watts to LED, Remote TS

YOUR COMPLETED ORDERING CODE
Follow the steps to specify your fixture, example:
DX-C - 1 - 275 - UNV - DIM10 - EM7

NOTES

1. DMX available only in DX-C-1.
2. ELV available in 120V.
3. All drivers on single Casambi dimming circuit.
4. AWNR reference page 9. for product specification on Athena wireless node.
5. EM available only with DX-C-1. Box size same as DX-C-2, with one driver and one battery.

* EldoLED uses logarithmic dimming curve as standard. For linear dimming curve, add "LIN" after dimming code, i.e. DIM10LIN.

WW BEAM (Note: Specifications are subject to change without notice)		
6mm COB PERFORMANCE DATA		
LED LIGHT ENGINE	NOMINAL DELIVERED LUMENS	SYSTEM WATTAGE
05LM	320LM @30K/97CRI	8W
07LM	490LM @30K/97CRI	12W
Notes	Delivered lumens based on WW optic	

ELECTRICAL/CONTROLS

- 120V-277V, 120 only Triac / ELV
- Power factor ≥ 0.9
- 2kV driver input surge protection
- Remote emergency test switch
- 7W, 10W (T20 CEC) and 12W EM 90min battery
- Max. ambient installation temperature 95°F (35°C)
- Minimum wire gauge approved mounting distance 18 AWG, 330 feet
- Maximum Remote mounting distance of EM driver shall be 50 feet

REMOTE SINGLE DRIVER BOX

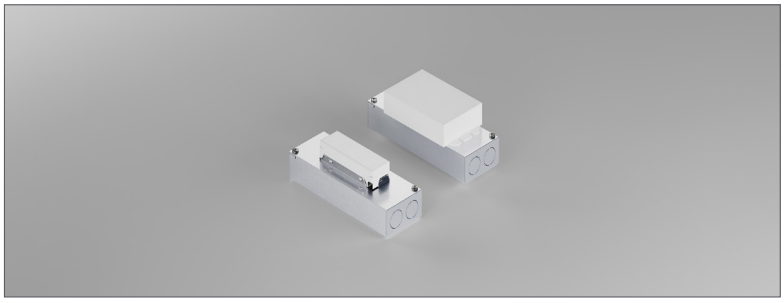

REMOTE 2 TO 3 DRIVER BOX (2 Drivers for DIM10Z/DALI/DALIZ/LUT/LUTP) (1 Driver + EM)

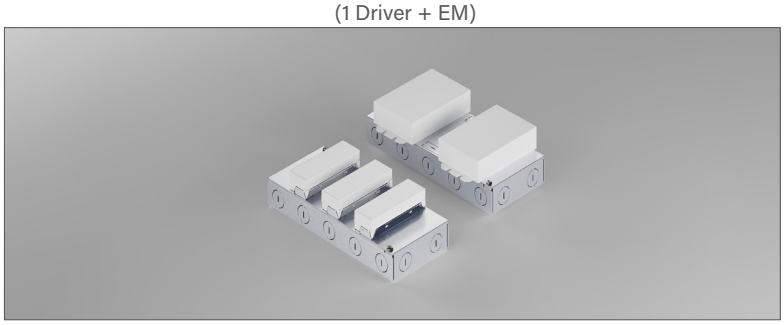

REMOTE 4 TO 5 DRIVER BOX (3 Drivers for DIM10Z/DALI/DALIZ/LUT/LUTP)

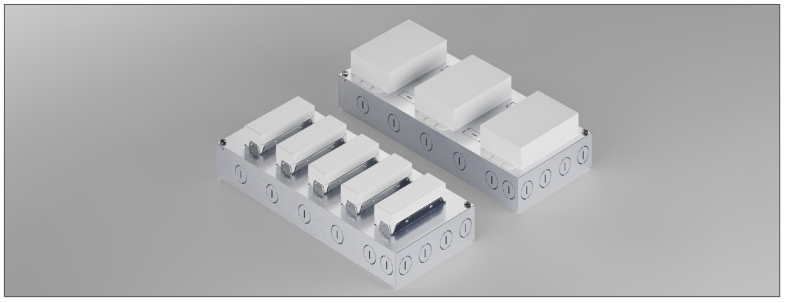

101252

PROJECT INFORMATION			
JOB NAME		TYPE	
ORDERING CODE			

DRIVER BOXES

REMOTE SINGLE DRIVER BOX

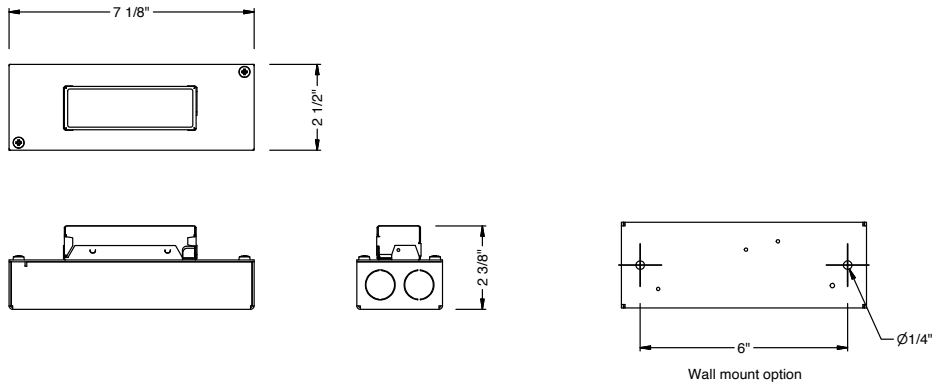

REMOTE 2 TO 3 DRIVER BOX (2 Drivers for DIM10Z/DALI/DALIZ/LUT/LUTP)

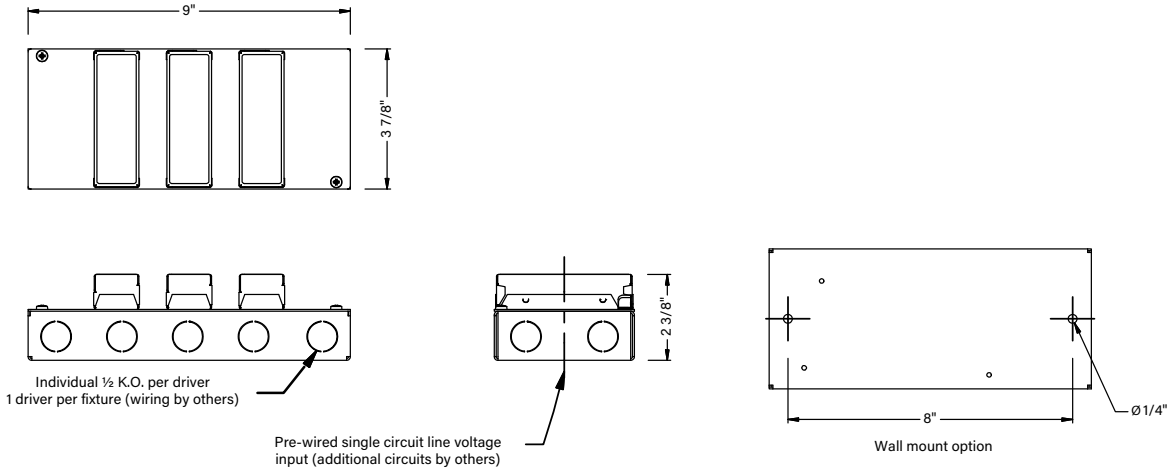

REMOTE 4 TO 5 DRIVER BOX (3 Drivers for DIM10Z/DALI/DALIZ/LUT/LUTP)

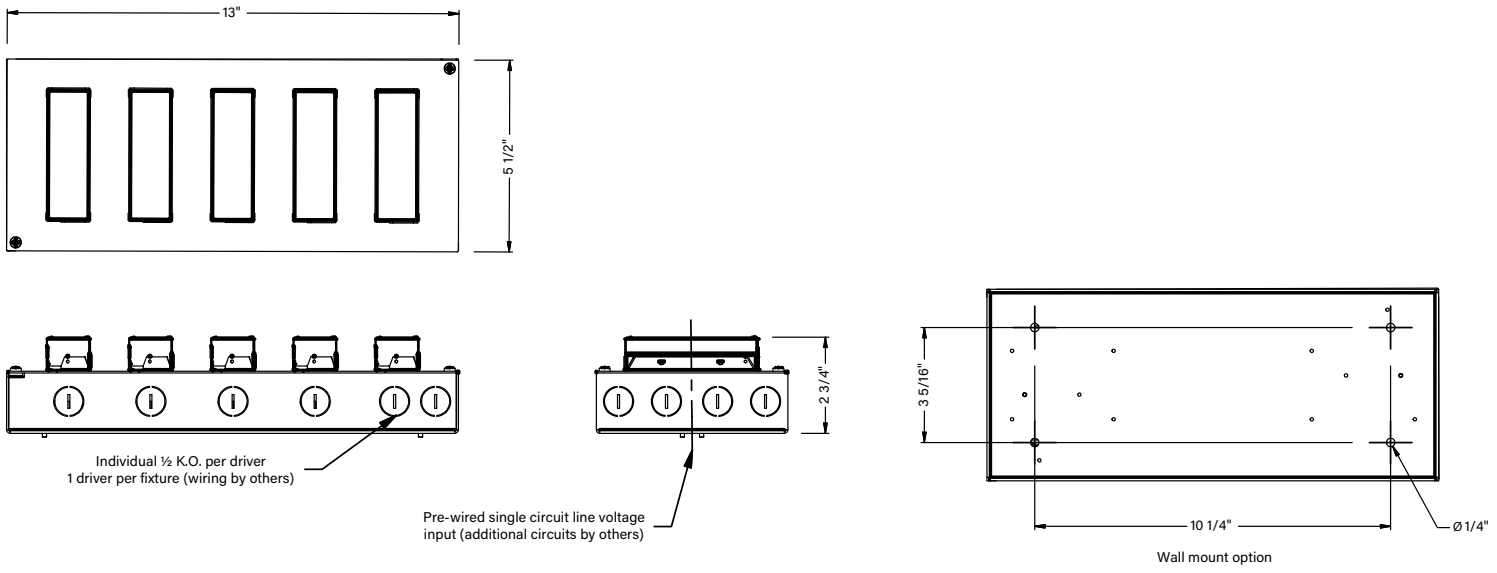

101252

alphabet

PROJECT INFORMATION			
JOB NAME		TYPE	
ORDERING CODE			

PHOTOMETRIC DATA DIAGRAM

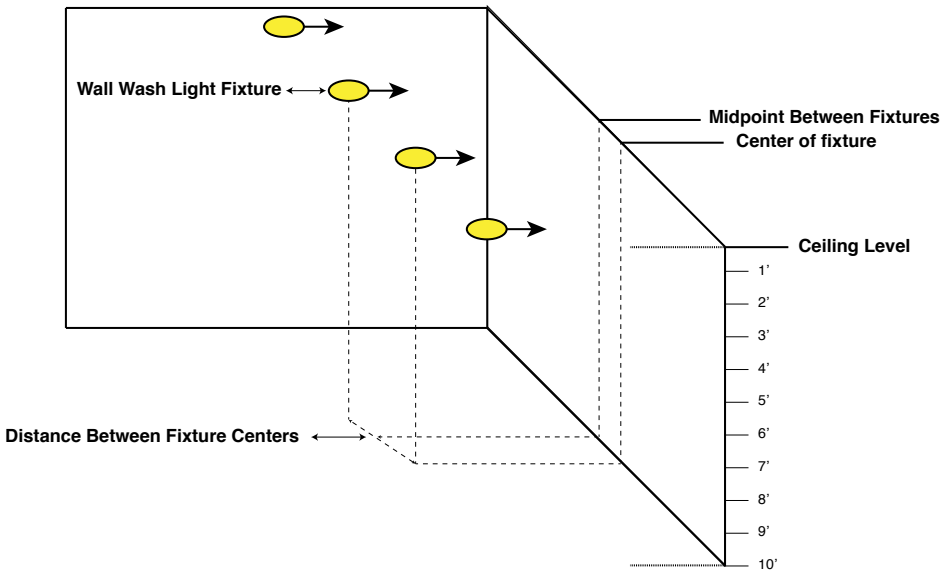

PHOTOMETRIC DATA CHARTS

FOOT CANDLE MEASUREMENT

WARM DIM WALL WASH 07LM 97CRI 3000K

MOUNTING DISTANCE	2' FROM WALL						3' FROM WALL						4' FROM WALL					
FIXTURE SPACING	2' ON CENTER		3' ON CENTER		4' ON CENTER		2' ON CENTER		3' ON CENTER		4' ON CENTER		3' ON CENTER		4' ON CENTER		6' ON CENTER	
DISTANCE FROM CEILING	CENTER	MID POINT	CENTER	MID POINT	CENTER	MID POINT	CENTER	MID POINT	CENTER	MID POINT	CENTER	MID POINT	CENTER	MID POINT	CENTER	MID POINT	CENTER	MID POINT
1'	14.6	14.3	11.1	8.2	10.2	4.5	3.7	3.7	2.6	2.5	2.2	1.6	0.6	0.6	0.5	0.4	0.5	0.2
2'	27.7	27.8	19.8	18.1	17	11.8	13.3	13.7	9.6	9.5	7.6	6.8	4.7	4.7	3.7	3.6	2.8	2.1
3'	24.2	24.6	17.4	16.9	14.1	12.1	16.7	17.2	12.3	12.4	9.6	9.2	7.6	7.8	6	6	4.4	3.7
4'	17.4	17.7	12.8	12.8	10.1	9.6	15.3	15.8	11.6	11.8	9.2	9	8.7	8.9	6.9	7	5	4.5
5'	11.9	12.2	9	9.2	7.1	7.1	12.5	12.8	9.7	9.9	7.7	7.8	8.3	8.5	6.7	6.8	4.8	4.6
6'	8.2	8.4	6.4	6.5	5.1	5.2	9.6	9.9	7.7	7.9	6.2	6.3	7.3	7.6	6	6.1	4.3	4.2
7'	5.7	5.8	4.6	4.7	3.8	3.9	7.3	7.5	6	6.1	4.9	5	6.2	6.4	5.2	5.3	3.8	3.7
8'	4.1	4.2	3.4	3.5	2.8	2.9	5.5	5.6	4.6	4.8	3.9	4	5.1	5.3	4.3	4.4	3.2	3.2
9'	3	3.1	2.6	2.6	2.2	2.2	4.2	4.3	3.6	3.7	3.1	3.2	4.2	4.3	3.6	3.7	2.7	2.7
10'	2.3	2.3	2	2	1.7	1.7	3.3	3.3	2.9	2.9	2.5	2.5	3.4	3.5	3	3	2.3	2.3

WARM DIM WALL WASH 05LM 97CRI 3000K

MOUNTING DISTANCE	2' FROM WALL						3' FROM WALL						4' FROM WALL					
FIXTURE SPACING	2' ON CENTER		3' ON CENTER		4' ON CENTER		2' ON CENTER		3' ON CENTER		4' ON CENTER		3' ON CENTER		4' ON CENTER		6' ON CENTER	
DISTANCE FROM CEILING	CENTER	MID POINT	CENTER	MID POINT	CENTER	MID POINT	CENTER	MID POINT	CENTER	MID POINT	CENTER	MID POINT	CENTER	MID POINT	CENTER	MID POINT	CENTER	MID POINT
1'	9.5	9.3	7.2	5.4	6.6	3	2.4	2.4	1.7	1.6	1.4	1	0.4	0.4	0.3	0.3	0.3	0.1
2'	18	18.1	12.9	11.8	11	7.7	8.7	8.9	6.2	6.2	5	4.4	3	3.1	2.4	2.3	1.8	1.3
3'	15.7	16	11.3	11	9.2	7.8	10.8	11.2	8	8	6.3	6	5	5.1	3.9	3.9	2.9	2.4
4'	11.3	11.5	8.3	8.3	6.6	6.2	10	10.3	7.6	7.7	6	5.9	5.6	5.8	4.5	4.5	3.2	2.9
5'	7.7	7.9	5.9	6	4.6	4.6	8.1	8.4	6.3	6.4	5	5	5.4	5.6	4.4	4.4	3.1	3
6'	5.3	5.4	4.2	4.3	3.3	3.4	6.3	6.4	5	5.1	4.1	4.1	4.8	4.9	3.9	4	2.8	2.7
7'	3.7	3.8	3	3.1	2.5	2.5	4.7	4.9	3.9	4	3.2	3.3	4	4.1	3.4	3.4	2.4	2.4
8'	2.7	2.7	2.2	2.3	1.8	1.9	3.6	3.7	3	3.1	2.5	2.6	3.3	3.4	2.8	2.9	2.1	2.1
9'	2	2	1.7	1.7	1.4	1.5	2.7	2.8	2.4	2.4	2	2.1	2.7	2.8	2.3	2.4	1.7	1.8
10'	1.5	1.5	1.3	1.3	1.1	1.1	2.1	2.2	1.9	1.9	1.6	1.6	2.2	2.3	1.9	2	1.5	1.5

NOTE

1.Performance based on typical reflectance values and room dimensions. IES files available at ledrabrands.com

PROJECT INFORMATION			
JOB NAME		TYPE	
ORDERING CODE			

MOUNTING OPTIONS

FIXTURE HEIGHT

05LM - 07LM

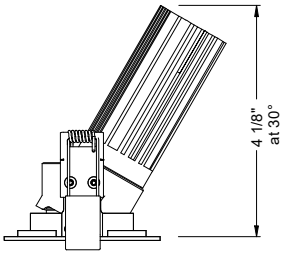

TRIMMED, TRIMLESS & MILLWORK

NC - NEW CONSTRUCTION

TRIM

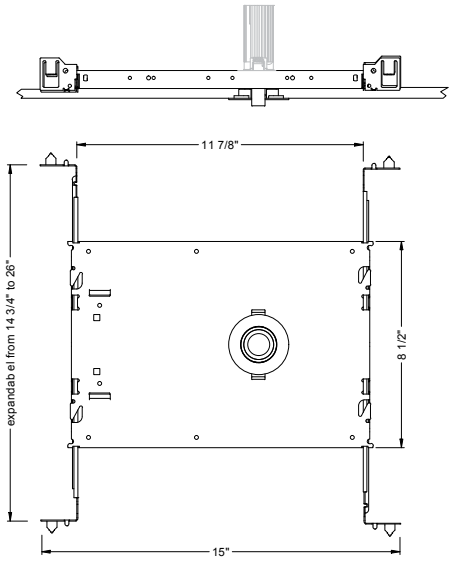

TRIM

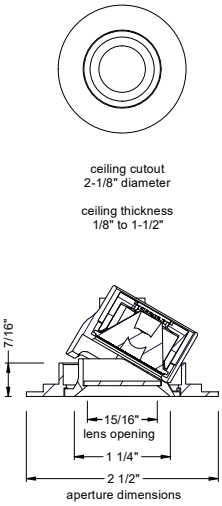

TRIMLESS

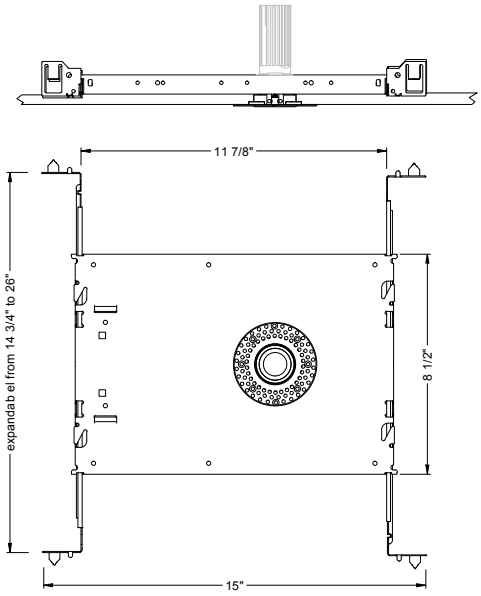

TRIMLESS

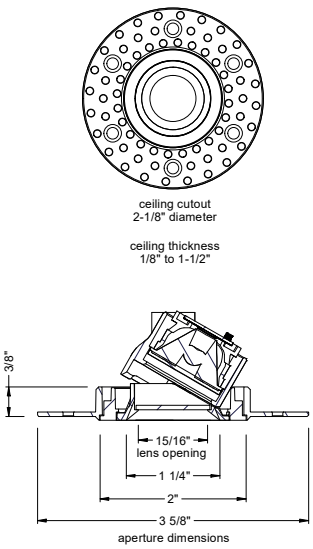

TRIMLESS/MILLWORK

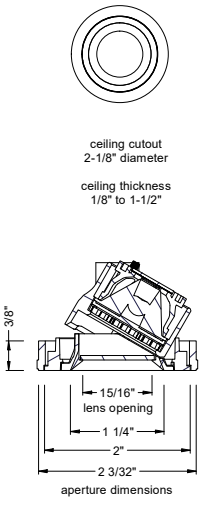

PROJECT INFORMATION			
JOB NAME		TYPE	
ORDERING CODE			

MOUNTING OPTIONS

RET - RETRO
TRIM/TRIMLESS

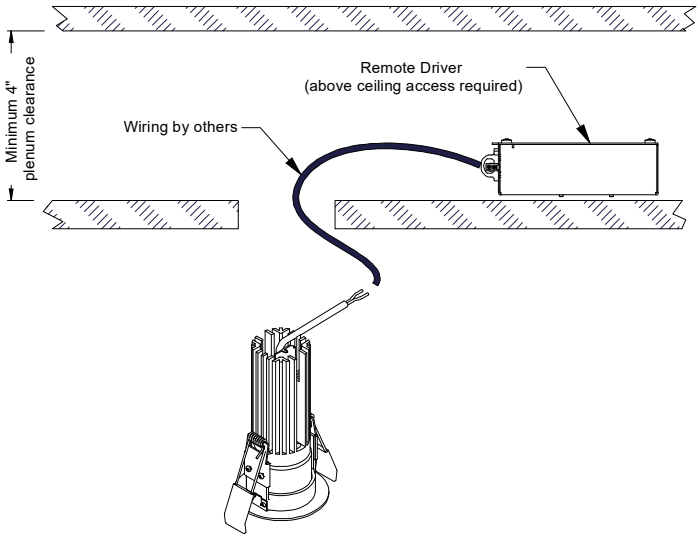

IC - INSULATION CONTACT HOUSING
ICAT - INSULATION CONTACT / AIR TIGHT
CP - CHICAGO PLENUM

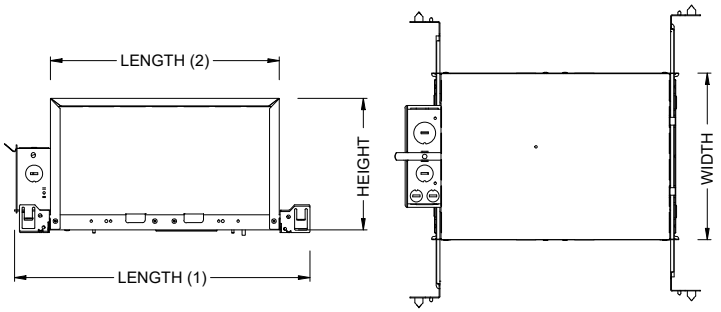

BOX SIZE	L 1	L 2	W	H
A	15 - 7/16"	11 - 3/4"	8 - 1/2"	6 - 3/4"

RATINGS / CERTIFICATIONS	NC	RET	RET	ICAT	CP	NCIC	RETIC
TYPE NON-IC	✔	✔					
TYPE IC			✔	✔	✔	✔	✔
CHICAGO PLENUM (CCEA)					✔		
SUITABLE FOR AIR HANDLING PLENUMS	✔	✔	✔	✔	✔	✔	✔
REDUCED AIRFLOW ASTM E283				✔	✔		

BOX TYPE / LUMEN OUTPUT - STANDARD BEAMS (12°-60°)			
LUMEN OUTPUT	BOX - A		
	CP	IC	ICAT
05LM	✔	✔	✔
07LM			

CEILING THICKNESS			
FIXTURE TYPE	MOUNTING TYPE		
	NC, IC, ICAT, CP, RET	NC, IC, ICAT, CP, RET	NC, IC, ICAT, CP, RET
	STANDARD CEILING THICKNESS	THICK CEILING THICKNESS	CEILING CUTOUT
TRIM	1/8" to 1.0"	1.0" to 1 1/2"	2-1/8" diameter
TRIMLESS	1/8" to 1.0"	1.0" to 1 1/2"	2-1/8" diameter
MILLWORK (TRIMLESS)	1/8" to 1.0"	1.0" to 1 1/2"	2-1/8" diameter

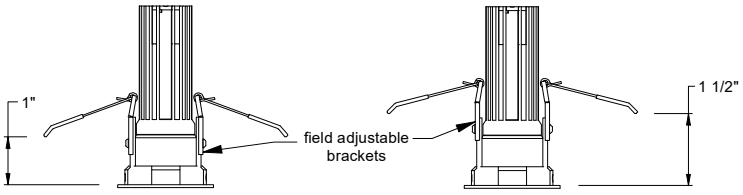

1/8" to 1" thick ceiling

1" to 1-1/2" thick ceiling

FIXTURE TILT INFO	
TILT	CEILING THICKNESS
0° TO 30°	1/8" to 1.0"
0° TO 20°	1.0" to 1 1/2"

PROJECT INFORMATION			
JOB NAME		TYPE	
ORDERING CODE			

BATTERY OPTIONS

EMERGENCY BATTERY

IOTA's ILB Battery Backups are UL Listed LED emergency drivers that allow the same LED fixture to be used for both normal and emergency operation. In the event of a power failure, the ILB switches to the emergency mode and operates the existing fixture for 90 minutes. The unit contains a battery, charger, and converter circuit in a single can. The Constant Power design of the ILB maintains the output wattage to the LED array even as the system voltage diminishes. UL 924 Listed for U.S. and Canada. UL 1310 Certified, Output Class 2 Compliant. Includes single-piece TBTS test switch and charge indicator accessory kit. For use with switched and unswitched fixtures, and includes Two-wire universal AC input. Meets or exceeds all National Electric Code and Life Safety Code Emergency Lighting Requirements. Rated for use in Plenum, Damp Location, Recessed Type IC, and Enclosed and Gasketed Luminares.

REMOTE TEST SWITCH

The Remote Test Switch may be mounted adjacent to the LED Fixture by others.

EMERGENCY BATTERY ACCESS

Above ceiling access is recommended for ease of service, but LED Fixture Sizes of 4" and Larger are capable of below ceiling access. IC/ICAT/CP Box and ITS option require an access panel in the ceiling (or other form of access) adjacent to the installation location of the Emergency Battery.

REMOTE LOCATION

Maximum remote mounting distance of the emergency driver shall be 50 feet. Remote location wiring provided by others. Follow all Local and National Electric/ Building Codes.

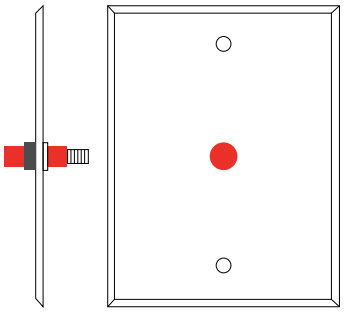

Remote Test Switch

EM MODE OUTPUT (DELIVERED LUMENS)	
LUMEN ORDERING CODE	EM7
ALL OPTIONS (05LM TO 07LM)	300
Notes:Based on 30K, 97CRI	

REMOTE EM BATTERY (REMOTE TEST SWITCH)

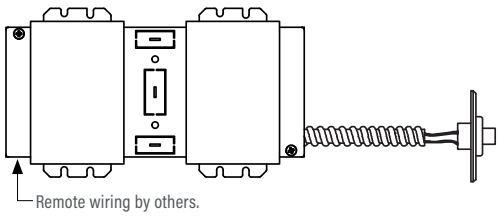

Accessory

76066 Optional T-Grid Mounting Kit[1]

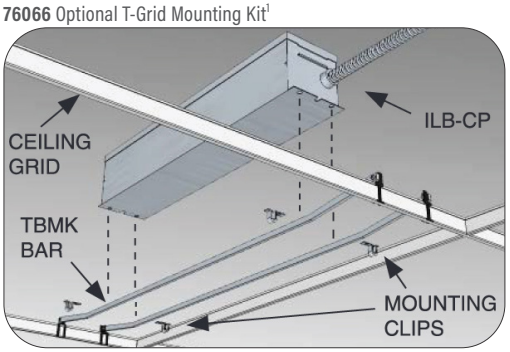

1. Can be used with any of the Emergency Battery Backups. Must be ordered as a separate line item.

In a continuing effort to offer the best product possible we reserve the right to change, without notice, specifications or materials that in our opinion will not alter the function of the product.

PROJECT INFORMATION			
JOB NAME		TYPE	
ORDERING CODE			

AWNR OPTIONS

Athena Wireless Node

The Athena wireless node is a radio frequency (RF) device that enables simple, digital control of individual light fixtures in an Athena control system.



Athena Wireless Node RF

OEM ADVANTAGE LUTRON

AWNR

Plenum rated and can be installed above the ceiling for wireless control of a fixture without any impact on fixture aesthetics.

FEATURES

- Enables individual, wireless control of each fixture in an Athena control system. Accommodates zone and control changes without rewiring.
- Installed at factory – no wiring required on-site. Fixture is ready to communicate wirelessly once power is connected.
- All drivers on the link are controlled as a single zone.

REGULATORY APPROVALS

- cULus Listed (UL916)
- Complies with requirements for use in other spaces used for environmental air (plenums) per NEC® 2014 300.22(C)(3).
- FCC compliant with the limits for a Class B digital device.
- IC (Industry Canada)
- ANSI C137.1 0–10 V- Electronic Off

POWER / LOAD

- IEC SELV/NEC® Class 2
- 1 Watt

ENVIRONMENTAL

- Ambient operating temperature (immediate vicinity of Athena wireless node): **32 °F to 131 °F** (0 °C to 55 °C), 0% to 90% humidity.

BATTERY OPTIONS

- For EM options please consult factory.

Note: Default behavior prior to programming

- Light level 100%
- Athena wireless node performs an unprogrammed startup sequence on every power up until the device is added to an Athena system.
- Each Athena wireless node should be installed within 25 ft (7.62 m) of two or more Athena wireless nodes or other Clear Connect – Type X devices.
- For Chicago plenum installations, the Athena wireless node may not be installed in the plenum space. It must be installed in the occupied space.

For servicing the driver/j-box, access above ceiling is required. (NC Mounting)

IC/ICAT/CP not available in AWNR.

101252