alphabet

PROJECT INFORMATION			
JOB NAME		TYPE	
ORDERING CODE			

NU4

4" Round Wall Wash Tamper Resistant Tunable White

NSF AT airtight DF dead-front PR plenum rated wet rated

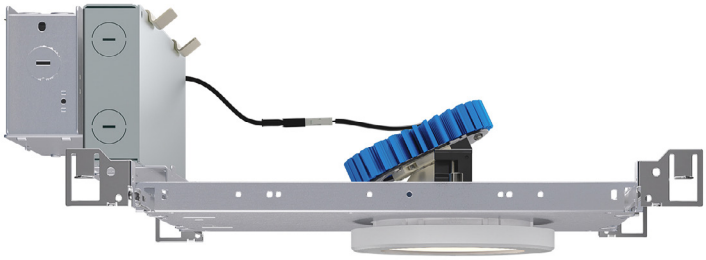

WW BEAM (Note: Specifications are subject to change without notice)		
14mm COB PERFORMANCE DATA		
LED LIGHT ENGINE	NOMINAL DELIVERED LUMENS	SYSTEM WATTAGE
10LM	1040LM @35K/95CRI	20W
15LM	1540LM @35K/95CRI	29W
Notes	Delivered lumens based on wall wash optic, (see page 2)	

FEATURES

- Designed to meet NYS-OMH rigorous requirements
- Tamper resistant, anti-ligature
- IK10 impact rated, vandal resistant
- UGR <18
- Microban antimicrobial finish available on all exposed painted surfaces

DIMMING AND CONTROLS

- eldoLED flicker free 0-10V dimming to 0% and 1%
- eldoLED flicker free DALI dimming to 0% and 1%
- DMX-512/RDM dim to 0%
- NLight control interface dimming to 0%
- Wireless control options, dim to 1% (see page 9)

CONSTRUCTION

- Spun Aluminum 6061 lensing frame
- 18-8 stainless steel tamper resistant screws
- Polycarbonate (3mm) shatter resistant lensing
- Electrocoated 16-gauge cold rolled steel construction
- Accommodates ceiling thickness from 1/8" to 1-5/8"
- **CUTOUT DIMENSION:**
  Tamper - 4-3/8

LED

- Luminus tunable white COB: 95 CRI, R9 > 70: SDCM = 3-step MacAdam Ellipse; Lumen Maintenance: L_{70} > 54,000 hrs

LISTING

- ULus Listed to UL1598 & UL2108; cUL Listed to CSA C22.2 #250.0
- IP65 with lens - Suitable for wet locations
- Non-conductive, dead-front construction (shower approved)
- NSF/ANSI-2 with lens (Non-Food and Splash Zones)
- NYSOMH - New York State Office of Mental Health compliant
- **Declare.** - LBC Red List Approved
- 5 Year Limited warranty

ELECTRICAL

- Power factor 0.9
- 2kV driver input surge protection
- Max. ambient installation temperature 95°F (35°C)

TRIM OPTION

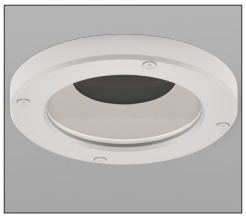

Tamper Resistant

BEAM SPREADS

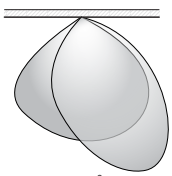

100˚

alphabet

PROJECT INFORMATION			
JOB NAME		TYPE	
ORDERING CODE			

ORDERING CODE

SERIES	**NU4**	NU4
TYPE	**RWTR**	round wall wash tamper resistant
LED	**TW**	tunable white (Luminus)
DELIVERED LUMENS	**10LM**	1040 lm
	15LM	1540 lm
	Standard Configuration: 3500K 95CRI **WW** **Calculated Delivered Lumens =** [Delivered Lumen Value] x [CCT Multiplier] x [Reflector Multiplier]	
CCT	**1840**	1800K to 4000K tunable white
	2765	2700K to 6000K tunable white
CRI	**95**	95 typical, 90 minimum
OPTIC & LM MULTIPLIER	**WW**	wall wash
TRIM COLOR	**BK**	black
	WH	white
	MC	matte chrome
	CC[1]	custom color, consult factory for details
	Antimicrobial finish, add **AM** to black, white or matte chrome i.e. BKAM.	
	Includes shatter proof lens and tamper resistant screws.	
BEZEL COLOR	**BK**	black (0.98)
	WH	white (1.00)
	MC	matte chrome (0.99)
	CC[1]	custom color, consult factory for details
	Antimicrobial finish, add **AM** to black, white or matte chrome i.e. BKAM.	

1840

CCT	1800K	2000K	2400K	2700K	3000K	3500K	4000K
CCT MULTIPLIER FOR LUMEN OUTPUT	0.67	0.74	0.8	0.85	0.88	0.95	1.01
EML RATIO	0.21	0.33	0.46	0.53	0.59	0.67	0.73

2765

CCT	2700K	3000K	3500K	4000K	5000K	5700K	6500K
CCT MULTIPLIER FOR LUMEN OUTPUT	0.91	0.98	1.00	0.99	1.00	1.01	1.02
EML RATIO	0.49	0.57	0.68	0.79	0.96	1.04	1.12

ORDERING CODE

MOUNTING OPTIONS	**NC**	new construction plate
	IC[2]	insulation contact housing
	ICAT[2]	insulation contact/airtight housing
	CP[2]	chicago plenum housing
VOLTAGE	**UNV**	120V-277V
	LVL[3,4]	low voltage luminaire
DIMMING	**DIM10Z5**	eldoLED flicker free 0-10V dim 0.1%
	DALIZ-DT6	eldoLED flicker free DALI-2, DT6, dim to 0.1%
	DALIZ-DT8	eldoLED flicker free DALI-2, DT8, dim to 0.1%
	DMX-RJ45	DMX control dimming to 0.1% with RJ45 connection
	DMX-WL	DMX-512/RDM dim to 0% with lead wire input
	DMX-XLR	DMX-512/RDM dim to 0% with XLR input
	NLT	nLight control interface: Cat-5/RJ45, dim to off
	WIRELESS (ref. page 9 for available options)	
	REMOTE DX COMPACT DRIVER (ref. page 8 for available options)	

YOUR COMPLETED ORDERING CODE

Follow the steps to specify your fixture, example:

NU4 - RWTR - TW - 10LM - 2765 - 95 - WW - WH - WH - NC - UNV - DIM10Z

NOTES

1. Custom set up fee plus minimum quantity required per color.
2. IC/ICAT/CP not available in 15LM.
3. Available with NC mounting option only.
4. Must select DX dimming with LVL.
5. Requires 2 wall controllers.

* EldoLED and DMX uses logarithmic dimming curve as standard. For linear dimming curve, add "LIN" after dimming code, i.e. DIM10LIN.

alphabet

PROJECT INFORMATION			
JOB NAME		TYPE	
ORDERING CODE			

PHOTOMETRIC DATA DIAGRAM

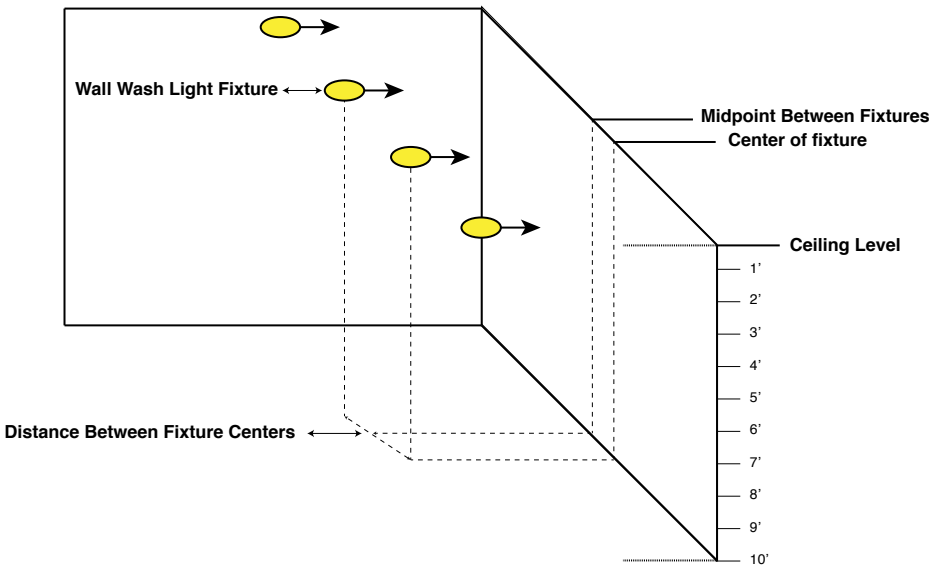

PHOTOMETRIC DATA CHARTS

FOOT CANDLE MEASUREMENT

TUNABLE WHITE WALL WASH 15LM 95CRI 3500K																		
MOUNTING DISTANCE	2' FROM WALL						3' FROM WALL						4' FROM WALL					
FIXTURE SPACING	2' ON CENTER		3' ON CENTER		4' ON CENTER		2' ON CENTER		3' ON CENTER		4' ON CENTER		3' ON CENTER		4' ON CENTER		6' ON CENTER	
DISTANCE FROM CEILING	CENTER	MID POINT	CENTER	MID POINT	CENTER	MID POINT	CENTER	MID POINT	CENTER	MID POINT	CENTER	MID POINT	CENTER	MID POINT	CENTER	MID POINT	CENTER	MID POINT
1'	31.3	28.4	26.4	14.8	24.7	7.6	6.5	6	5.4	4.3	4.6	2.2	3.5	3.3	2.8	2.5	2.1	1.6
2'	108.2	110.8	74.9	73.5	65	45.5	29.2	28.9	23.9	20.6	21.9	7.8	9.7	9.2	7.8	7.1	6.6	3.7
3'	87.5	88.8	61	61.9	47.8	45.3	48.1	49.3	36.4	37.8	28.9	20.2	26.9	26.6	20.6	20.6	15.4	12.5
4'	54.3	55.6	39.9	40.7	30.9	31	44.2	44.5	33.7	34.7	24.1	22	35	35.3	27.1	27.7	18.7	18.4
5'	33.3	34.1	25.7	26.4	20.3	20.7	33.5	34.2	26.4	27	18.4	17.9	32.4	33	26.1	26.2	17.7	18
6'	21.2	21.7	17.1	17.6	13.8	14.2	24.1	24.7	19.5	20.1	13.7	13.8	26.6	27.3	21.9	22.2	15.3	15.5
7'	14.1	14.4	11.8	12.1	9.8	10.1	17.4	17.8	14.4	14.8	10.3	10.5	20.7	21.2	17.4	17.8	12.5	12.6
8'	9.8	10	8.4	8.7	7.2	7.4	12.7	13	10.8	11.1	7.9	8.1	15.8	16.2	13.6	13.9	10	10.2
9'	7	7.1	6.2	6.3	5.4	5.5	9.4	9.6	8.2	8.4	6.1	6.3	12.1	12.4	10.6	10.8	8	8.2
10'	5.2	5.2	4.7	4.8	4.1	4.2	7.1	7.3	6.3	6.5	4.9	5	9.4	9.6	8.3	8.5	6.4	6.6

TUNABLE WHITE WALL WASH 10LM 95CRI 3500K																		
MOUNTING DISTANCE	2' FROM WALL						3' FROM WALL						4' FROM WALL					
FIXTURE SPACING	2' ON CENTER		3' ON CENTER		4' ON CENTER		2' ON CENTER		3' ON CENTER		4' ON CENTER		3' ON CENTER		4' ON CENTER		6' ON CENTER	
DISTANCE FROM CEILING	CENTER	MID POINT	CENTER	MID POINT	CENTER	MID POINT	CENTER	MID POINT	CENTER	MID POINT	CENTER	MID POINT	CENTER	MID POINT	CENTER	MID POINT	CENTER	MID POINT
1'	21.2	19.3	17.9	10	16.8	5.1	4.4	4.1	3.6	2.9	3.1	1.5	2.4	2.3	1.9	1.7	1.4	1.1
2'	73.5	75.2	50.8	49.9	44.1	30.9	19.8	19.6	16.2	14	14.9	5.3	6.6	6.3	5.3	4.8	4.5	2.5
3'	59.4	60.3	41.4	42	32.4	30.8	32.7	33.4	24.7	25.7	19.6	13.7	18.2	18	14	14	10.4	8.5
4'	36.8	37.7	27.1	27.6	21	21	30	30.2	22.8	23.5	16.4	15	23.8	23.9	18.4	18.8	12.7	12.5
5'	22.6	23.1	17.4	17.9	13.7	14	22.7	23.2	17.9	18.3	12.5	12.2	22	22.4	17.7	17.8	12	12.2
6'	14.4	14.7	11.6	11.9	9.4	9.7	16.4	16.8	13.2	13.6	9.3	9.3	18	18.5	14.9	15.1	10.4	10.5
7'	9.6	9.8	8	8.2	6.7	6.8	11.8	12.1	9.8	10.1	7	7.1	14	14.4	11.8	12.1	8.5	8.6
8'	6.6	6.8	5.7	5.9	4.9	5	8.6	8.8	7.3	7.5	5.4	5.5	10.7	11	9.2	9.4	6.8	6.9
9'	4.8	4.8	4.2	4.3	3.6	3.7	6.4	6.5	5.6	5.7	4.2	4.3	8.2	8.4	7.2	7.4	5.4	5.5
10'	3.5	3.6	3.2	3.2	2.8	2.9	4.8	5	4.3	4.4	3.3	3.4	6.4	6.5	5.6	5.8	4.4	4.5

NOTE

1. Performance based on typical reflectance values and room dimensions. IES files available at ledrabrands.com

PROJECT INFORMATION			
JOB NAME		TYPE	
ORDERING CODE			

TRIM OPTIONS

TRIM/BEZEL COLORS



WH MC BK CC

TAMPER RESISTANT

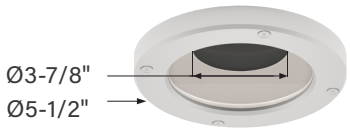

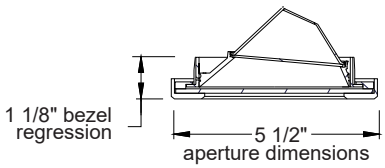

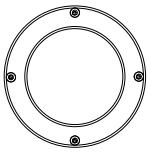

ceiling cutout
4-3/8" diameter

ceiling thickness
1/8" to 1-5/8"

PROJECT INFORMATION			
JOB NAME		TYPE	
ORDERING CODE			

MOUNTING OPTIONS

RATINGS / CERTIFICATIONS	NC	RET	IC	ICAT	CP
TYPE NON-IC	✔	✔			
TYPE IC			✔	✔	
CHICAGO PLENUM (CCEA)					✔
SUITABLE FOR AIR HANDLING PLENUMS	✔	✔	✔	✔	✔
REDUCED AIRFLOW (WITH LENS) ASTM E283	✔	✔	✔	✔	✔

MOUNTING TYPE	STANDARD CEILING THICKNESS	STANDARD CEILING CUTOUT
TRIM	1/8" to 1-5/8"	4-3/8"

PLENUM HEIGHT

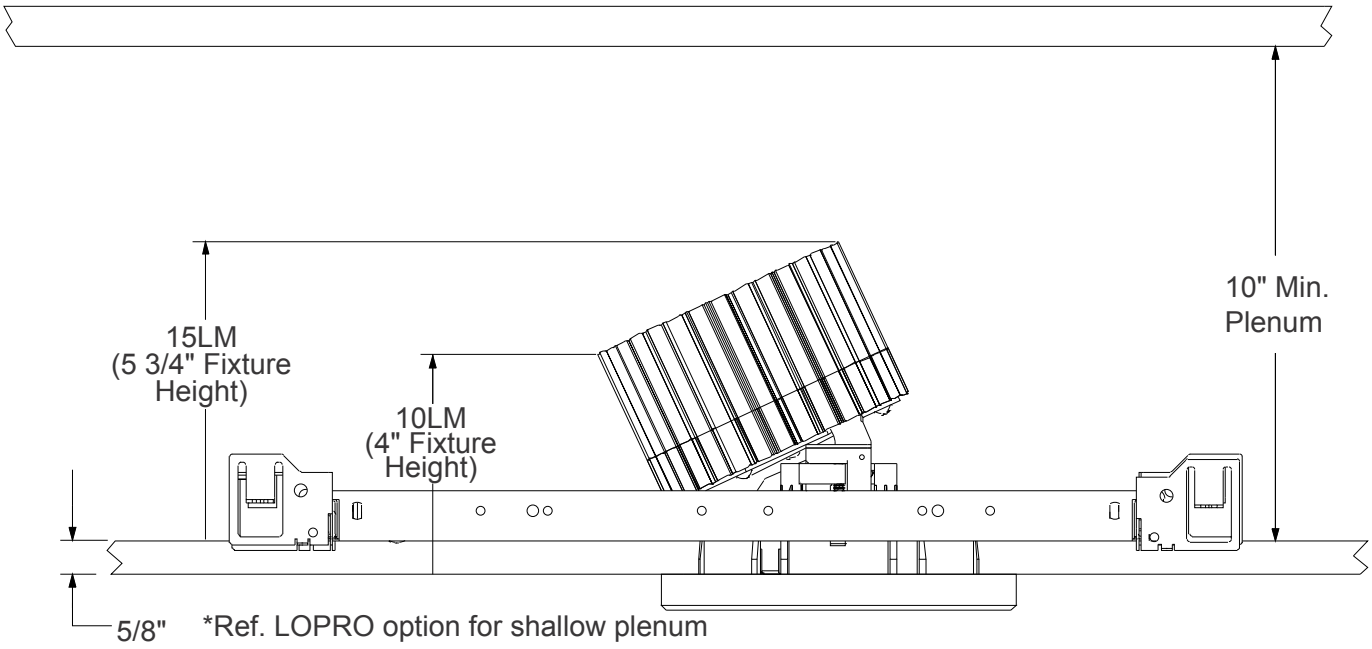

NEW CONSTRUCTION - NC

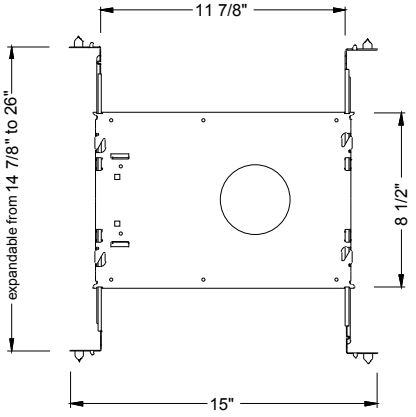

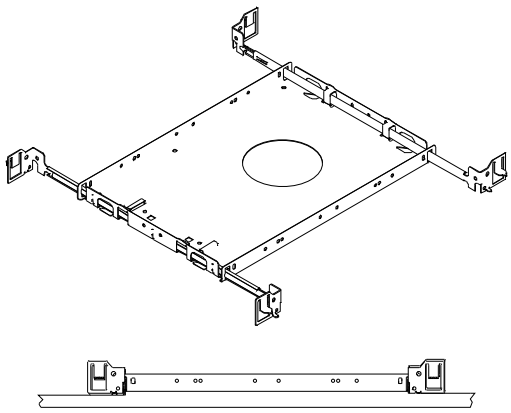

ADDITIONAL MOUNTING INFO	
New Construction Bar Hangers (included)	Mounting Length: 14-3/4" to 26"
Extension Kit p/n: K20266 (ordered separately, 1 per fixture)	*Extends a pair of Bar Hangers* Total Mounting Length: 29" to 48"

PROJECT INFORMATION			
JOB NAME		TYPE	
ORDERING CODE			

MOUNTING OPTIONS

10LM-15LM (DIM10Z / DALIZ-DT6 / DALIZ-DT8)
(BELOW CEILING ACCESSIBLE)

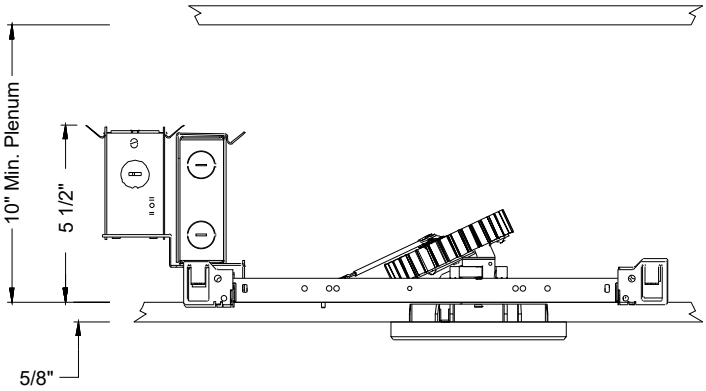

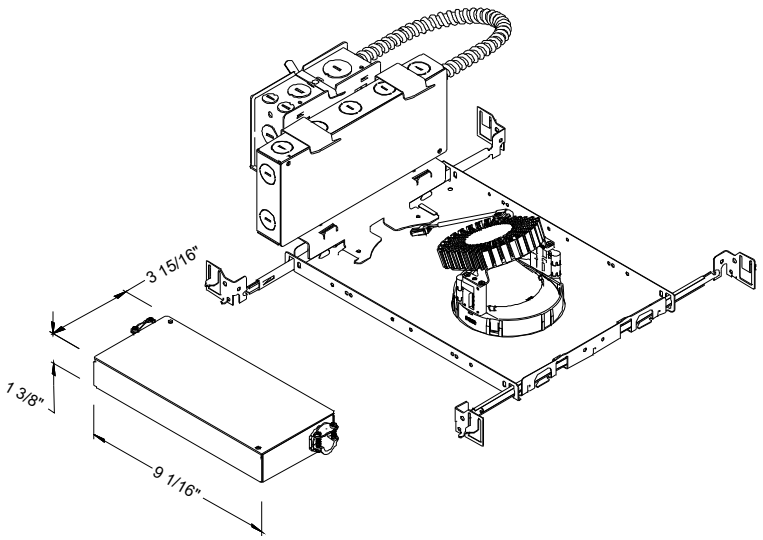

10LM-15LM (DMX-WL / DMX-XLR / DMXZ-RJ45)
(BELOW CEILING ACCESSIBLE)

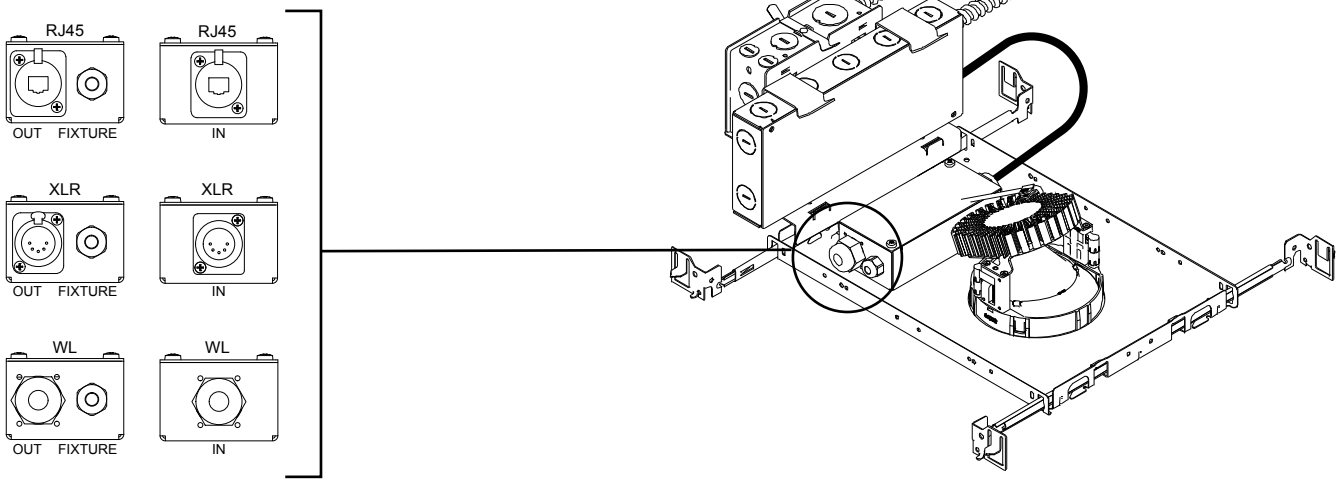

10LM-15LM NLT HOUSING - (NLT)
(BELOW CEILING ACCESSIBLE)

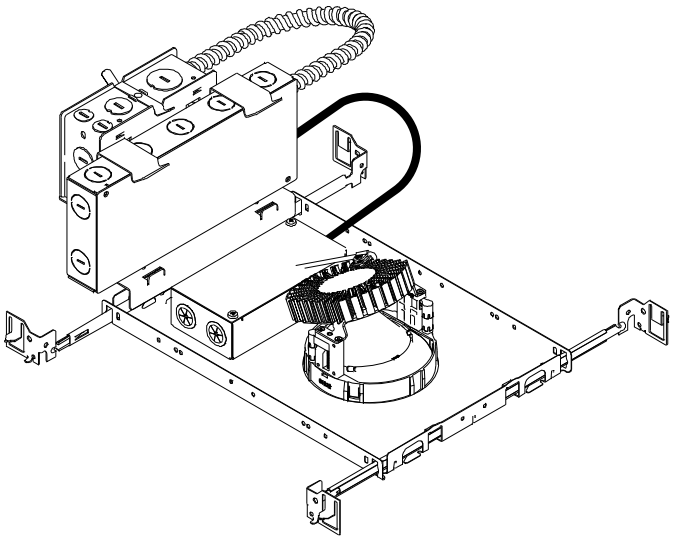

In a continuing effort to offer the best product possible we reserve the right to change, without notice, specifications or materials that in our opinion will not alter the function of the product.

PROJECT INFORMATION			
JOB NAME		TYPE	
ORDERING CODE			

MOUNTING OPTIONS

IC - INSULATION CONTACT | ICAT - INSULATION CONTACT / AIR TIGHT | CP - CHICAGO PLENUM
(DIM10Z / DALIZ-DT6 / DALIZ-DT8)

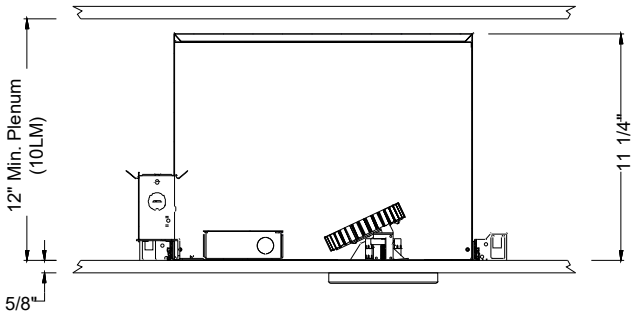

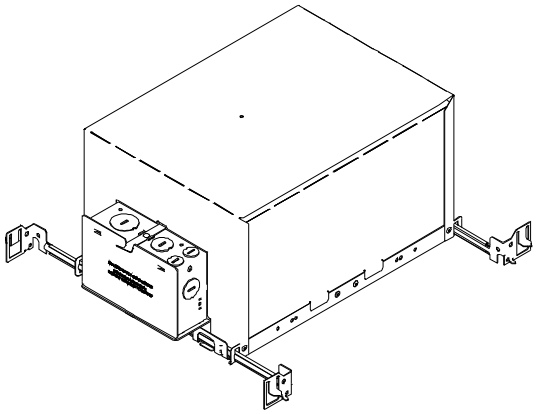

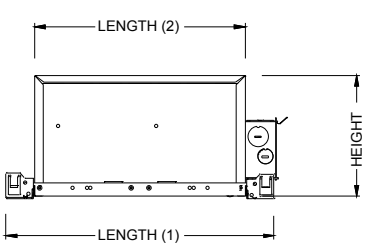

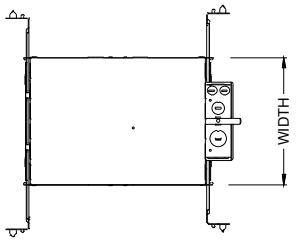

BOX SIZE	L 1	L 2	W	H
A	18 - 1/4"	14 - 7/8"	12 - 1/8"	11 - 1/4"

BOX TYPE / LUMEN OUTPUT - STANDARD BEAMS (25° - 65°)			
LUMEN OUTPUT	BOX-A		
	IC	ICAT	CP
10LM	✔	✔	✔
15LM			

PROJECT INFORMATION			
JOB NAME		TYPE	
ORDERING CODE			

REMOTE COMPACT DRIVER

REMOTE COMPACT DRIVER (DIMMING)

DX ORDERING OPTIONS	
DIM10Z-DX	remote compact eldoLED flicker free 0-10V dim 0.1% driver
DALIZ-DT6-DX	remote compact eldoLED flicker free DALI-2, DT6, dim to 0.1% driver
DALIZ-DT8-DX	remote compact eldoLED flicker free DALI-2, DT8, dim to 0.1% driver
DMX-RJ45-DX	remote compact DMX-512/RDM dim to 0% with RJ45 input driver

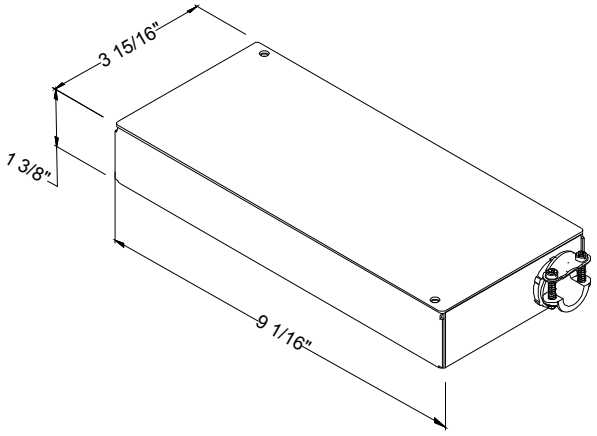

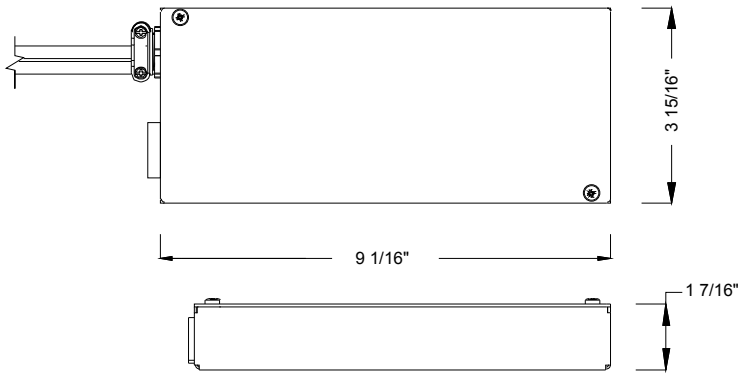

*Remote DX can power LEDs up to 330FT (18 AWG).
Customer will recieve a single remote compact driver per fixture.

PLENUM HEIGHT

(NC-LVL-DX) NEW CONSTRUCTION REMOTE DX DRIVER

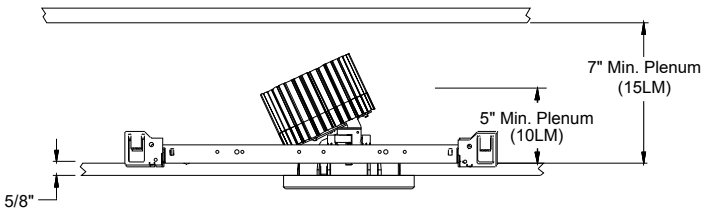

NOMINAL LED VOLTAGE: 36VDC

Customer to order CC Remote Driver separately or POE Node by others.

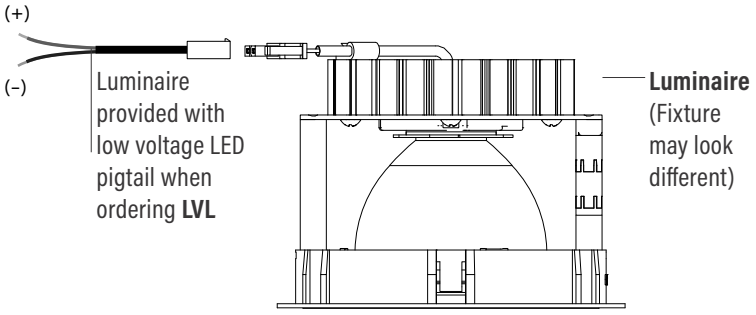

alphabet

PROJECT INFORMATION			
JOB NAME		TYPE	
ORDERING CODE			

WIRELESS OPTIONS

NC - NEW CONSTRUCTION (10LM)
PLENUM SIDE

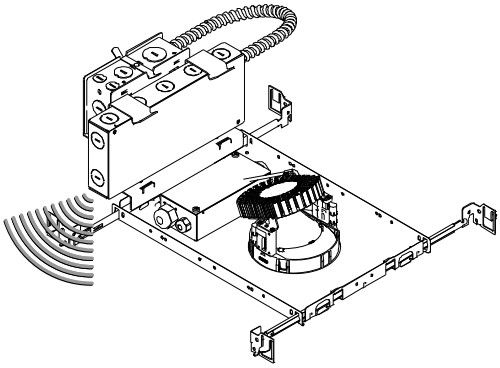

NC - NEW CONSTRUCTION (10LM)
DX REMOTE

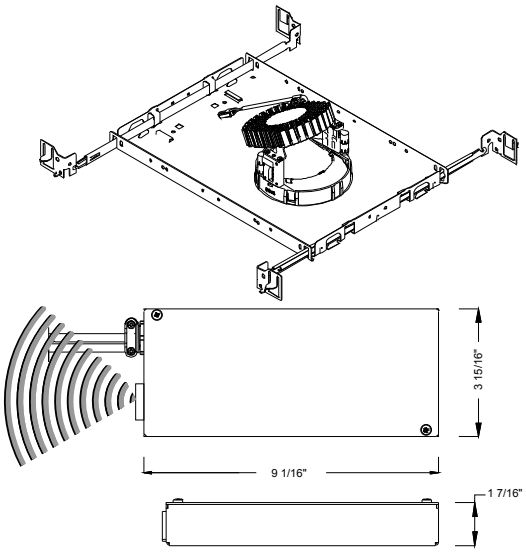

Customer must verify system design and installation with their controls provider (e.g., Lutron). Wireless signal strength, reliability, performance, and commissioning are the responsibility of the customer. Remote DX can power LEDs up to 330FT (18 AWG), but adequate wireless signal is customers responsibility.

YOUR COMPLETED ORDERING CODE
Follow the steps to specify your fixture, example:
NU4 - RWTR - TW - 10LM - 2765 - 95 - WW - WH - WH - NC - UNV - DIM10Z - AWN
NU4 - RWTR - TW - 10LM - 2765 - 95 - WW - WH - WH - NC - UNV - DIM10Z - AWN - DX

LUTRON Athena

ORDERING CODE

AWND. . . . . .athena wireless node (DALI2 Driver) - integrated / above ceiling

AWND-DX . .athena wireless node (DALI2 Driver) - remote DX Compact Driver



MODEL NUMBER

athena node model #: A-WN-D01-RF

POWER SUPPLY

(DALI2 Driver): Moons D4i DALI2 LED driver with DALI Bus Power, Dim-to-off

legrand WATTSTOPPER® PLUS

ORDERING CODE

CLMD . . . . . connected lighting module (DALI2 Driver) - integrated / above ceiling

CLMD-DX. . . connected lighting module (DALI2 Driver) - remote DX Compact Driver



MODEL NUMBER

CLM model #: ZBHA-CLM-DIM

POWER SUPPLY

(DALI2 Driver): Moons D4i DALI2 LED driver with DALI Bus Power, Dim-to-off