Decorative Outdoor

MainView Family
with LumiLock LED engine GX5

MV Post top



Project:

Location:

Cat.No:

Type:

Lamps: Qty:

Notes:

Hadco MainView Family LED post tops are traditionally styled luminaires created for comfort and ease of maintenance. The configurable LED light engine GX5 is an ideal alternative to HID sources, providing you with significant energy savings, and more choices for light levels, optics and controls. Includes Service Tag, Hadco's innovative way to provide assistance throughout the life of the product. MainView is the clear choice for communities looking to provide comfortable lighting for less.

Ordering guide

Example: MV-5-G3-G-VC-B-N-2-4-740-A-3-N-R7-SP2X-BKS

Series	Distribution	Generation	Pod	Globe	Cage	Finial	Fasteners	Drive Current	Color Temp.
MV		G3							
MV MainView	**3** Type 3 (Short Optic only) **5** Type 5 (Short Optic only)	**G3** Gen 3	**A** Octangonal style **B** Round fitter with scalloped petals **C** Fluted tapered hourglass **D** Smooth tapered hourglass **G** Tall round fluted	**TC** Tudor Comfort Acorn **VC** Victorian Comfort Acorn **WC** Windsor Comfort Acorn	**N** None **B**[7] Cage (Wide) (custom logo cage available - contact factory) **N** None **N** None	**A** **B** **C** **D** **E** **F** **G** **H** **N** None	**1** Hex Head **2** Allen head	**1** 100 mA **2** 200 mA **3** 350 mA **4** 450 mA **5** 530 mA **6** 610 mA	**730** 70CRI 3000K **740** 70CRI 4000K **827** 80CRI 2700K

Voltage	Integral Control Options Pick only one	Pod Photo Control Located inside pod, Pick only one	Future Proof Photo Control	Surge Protection	Finish
A 120-277 VAC **B** 347-480 VAC **C**[5] 277-480 VAC	**D4ID**[3] D4i certified DALI driver **S**[4] FAWS Field Adjustable Wattage Selector **N** None (0-10V dimming driver standard)	**E** 120VAC Button Eye **H** 208/240/ 277 VAC Button Eye **R**[1,6] 3-Pin Receptacle **N** None	**R7**[1,2] 7-pin **N**	**SP1** Fail-On 10kV/5kA Nominal Surge Protector **SP2** Fail-On 20kV/10kA Nominal Surge Protector **SP1X**[6] Fail-Off 10kV/5kA Nominal Surge Protector **SP2X**[6] Fail-Off 20kV/10kA Nominal 0-10V Surge Protector	**Smooth** **BKS** Black **WHS** White **BZS** Bronze **GNS** Green **Textured** **BK** Black **WH** White **BZ** Bronze **GN** Green

1. Use of photoelectric cell or shorting cap is required to ensure proper illumination. When R, R7 options are selected, product will ship with shorting cap(s) installed.
2. For 7-pin receptacle R7, Interact City control node Astroclock version (ordered and shipped separately) will fit and communicate properly - other nodes need to be confirmed.
3. D4i driver D4ID not available with B 347-480VAC or with C 277-480VAC at 100 mA or 200 mA (is available with C 277-480VAC at 350 mA to 610mA). D4i driver D4ID replaces DA-DJ Dynadimmer or DL DALI driver with same functionality plus next generation extended DALI 2 functionality - contact factory for details.
4. FAWS S position 10 is open for receptacle control, must use one or the other but not BOTH. Position 10 does NOT reduce lumens or wattage.
5. Voltage C 277-480VAC not available with 100mA or 200mA.
6. 3-pin photocell receptacle R only available in A, B or G pods - does not fit in C or D pods. Fail-Off SP1X or SP2X when combined with 3-pin receptacle R3 only available in B pod - both options together do not fit in A or G pods.
7. B Cage (Wide) available with VC Victorian Comfort; NOT available with TC Tudor Comfort or WC Windsor Comfort - does not properly fit or look appropriate, B Cage also NOT available with A Octagonal style pod - does not fit.

Connected lighting

Interact City connector node provides the plug and play wireless communications technology to connect your street light to the Interact City lighting management system.

Ordering Code	Accessory Description
LLC	Interact City cellular technology connector node



Contact the factory for additional support when connected lighting or additional services are desired.

MV MainView with LumiLock LED engine GX5

Post Top

LED Wattage and Lumen Values (all no cage)

Ordering Code	Color Temp. (K)	System Current (mA)	Avg. System Wattage (W)	Type 3			Type 5		
				Lumen Output	Efficacy (LPW)	BUG Rating	Lumen Output	Efficacy (LPW)	BUG Rating
MV-x-G3-TC-1-827	2700	100	20	2,745	139	B1-U4-G2	2,759	140	B1-U4-G2
MV-x-G3-TC-2-827	2700	200	39	5,356	137	B1-U5-G3	5,383	138	B2-U5-G3
MV-x-G3-TC-3-827	2700	350	67	8,692	129	B2-U5-G4	8,735	130	B3-U5-G3
MV-x-G3-TC-4-827	2700	450	87	10,842	125	B2-U5-G4	10,897	126	B3-U5-G4
MV-x-G3-TC-5-827	2700	530	101	12,253	121	B2-U5-G5	12,315	122	B3-U5-G4
MV-x-G3-TC-6-827	2700	610	118	13,958	118	B3-U5-G5	14,029	119	B3-U5-G4
MV-x-G3-TC-1-730	3000	100	20	3,201	163	B1-U4-G2	3,217	163	B1-U4-G2
MV-x-G3-TC-2-730	3000	200	39	6,245	160	B2-U5-G3	6,277	161	B2-U5-G3
MV-x-G3-TC-3-730	3000	350	67	10,135	151	B2-U5-G4	10,186	152	B3-U5-G3
MV-x-G3-TC-4-730	3000	450	87	12,643	146	B3-U5-G5	12,707	147	B3-U5-G4
MV-x-G3-TC-5-730	3000	530	101	14,288	142	B3-U5-G5	14,360	142	B3-U5-G4
MV-x-G3-TC-6-740	3000	610	118	16,276	138	B3-U5-G5	16,358	138	B3-U5-G5
MV-x-G3-TC-1-740	4000	100	20	3,430	174	B1-U4-G3	3,447	175	B1-U4-G2
MV-x-G3-TC-2-740	4000	200	39	6,693	172	B2-U5-G3	6,727	173	B2-U5-G3
MV-x-G3-TC-3-740	4000	350	67	10,861	162	B2-U5-G4	10,916	162	B3-U5-G4
MV-x-G3-TC-4-740	4000	450	87	13,549	156	B3-U5-G5	13,617	157	B3-U5-G4
MV-x-G3-TC-5-740	4000	530	101	15,311	152	B3-U5-G5	15,389	153	B3-U5-G5
MV-x-G3-TC-6-740	4000	610	118	17,442	147	B3-U5-G5	17,531	148	B3-U5-G5
MV-x-G3-VC-1-827	2700	100	20	2,823	143	B1-U4-G2	2,824	143	B1-U4-G2
MV-x-G3-VC-2-827	2700	200	39	5,508	141	B1-U5-G3	5,511	141	B2-U5-G3
MV-x-G3-VC-3-827	2700	350	67	8,938	133	B2-U5-G4	8,943	133	B3-U5-G3
MV-x-G3-VC-4-827	2700	450	87	11,150	129	B2-U5-G4	11,156	129	B3-U5-G4
MV-x-G3-VC-5-827	2700	530	101	12,600	125	B3-U5-G5	12,607	125	B3-U5-G4
MV-x-G3-VC-6-827	2700	610	118	14,354	121	B3-U5-G5	14,362	121	B3-U5-G4
MV-x-G3-VC-1-730	3000	100	20	3,291	167	B1-U4-G2	3,293	167	B1-U4-G2
MV-x-G3-VC-2-730	3000	200	39	6,422	165	B2-U5-G3	6,426	165	B2-U5-G3
MV-x-G3-VC-3-730	3000	350	67	10,422	155	B2-U5-G4	10,428	155	B3-U5-G4
MV-x-G3-VC-4-730	3000	450	87	13,001	150	B3-U5-G5	13,009	150	B3-U5-G4
MV-x-G3-VC-5-730	3000	530	101	14,692	146	B3-U5-G5	14,701	146	B3-U5-G4
MV-x-G3-VC-6-740	3000	610	118	16,737	142	B3-U5-G5	16,747	142	B3-U5-G5
MV-x-G3-VC-1-740	4000	100	20	3,527	179	B1-U4-G2	3,529	179	B1-U4-G2
MV-x-G3-VC-2-740	4000	200	39	6,882	177	B2-U5-G3	6,886	177	B2-U5-G3
MV-x-G3-VC-3-740	4000	350	67	11,169	166	B2-U5-G4	11,175	166	B3-U5-G4
MV-x-G3-VC-4-740	4000	450	87	13,933	161	B3-U5-G5	13,941	161	B3-U5-G4

Continued on the next page.

MV MainView with LumiLock LED engine GX5

Post Top

LED Wattage and Lumen Values (all no cage)

Ordering Code	Color Temp. (K)	System Current (mA)	Avg. System Wattage (W)	Type 3			Type 5		
				Lumen Output	Efficacy (LPW)	BUG Rating	Lumen Output	Efficacy (LPW)	BUG Rating
MV-x-G3-VC-5-740	4000	530	101	15,745	156	B3-U5-G5	15,754	156	B3-U5-G5
MV-x-G3-VC-6-740	4000	610	118	17,937	152	B3-U5-G5	17,947	152	B3-U5-G5
MV-x-G3-WC-1-827	2700	100	20	2,802	142	B1-U4-G2	2,801	142	B1-U4-G2
MV-x-G3-WC-2-827	2700	200	39	5,468	140	B1-U5-G3	5,466	140	B2-U5-G3
MV-x-G3-WC-3-827	2700	350	67	8,873	132	B2-U5-G4	8,871	132	B3-U5-G3
MV-x-G3-WC-4-827	2700	450	87	11,069	128	B2-U5-G4	11,066	128	B3-U5-G4
MV-x-G3-WC-5-827	2700	530	101	12,509	124	B2-U5-G5	12,505	124	B3-U5-G4
MV-x-G3-WC-6-827	2700	610	118	14,251	121	B3-U5-G5	14,246	120	B3-US-G4
MV-x-G3-WC-1-730	3000	100	20	3,268	166	B1-U4-G2	3,267	166	B1-U4-G2
MV-x-G3-WC-2-730	3000	200	39	6,376	164	B2-U5-G3	6,374	163	B2-U5-G3
MV-x-G3-WC-3-730	3000	350	67	10,347	154	B2-U5-G4	10,344	154	B3-U5-G4
MV-x-G3-WC-4-730	3000	450	87	12,908	149	B3-U5-G5	12,903	149	B3-U5-G4
MV-x-G3-WC-5-730	3000	530	101	14,587	145	B3-U5-G5	14,582	145	B3-U5-G4
MV-x-G3-WC-6-740	3000	610	118	16,617	141	B3-U5-G5	16,612	140	B3-U5-G5
MV-x-G3-WC-1-740	4000	100	20	3,502	178	B1-U4-G3	3,501	178	B1-U4-G2
MV-x-G3-WC-2-740	4000	200	39	6,833	175	B2-U5-G3	6,831	175	B2-U5-G3
MV-x-G3-WC-3-740	4000	350	67	11,088	165	B2-U5-G4	11,085	165	B3-U5-G4
MV-x-G3-WC-4-740	4000	450	87	13,832	160	B3-U5-G5	13,828	160	B3-U5-G4
MV-x-G3-WC-5-740	4000	530	101	15,632	155	B3-U5-G5	15,627	155	B3-U5-G5
MV-x-G3-WC-6-740	4000	610	118	17,808	151	B3-U5-G5	17,802	151	B3-U5-G5

Actual performance may vary due to installation variables including optics, mounting/ceiling height, dirt depreciation, light loss factor, etc.; highly recommended to confirm performance with a layout. Note: Some data may be scaled based on tests of similar but not identical luminaries.

Predicted Lumen Depreciation Data

Predicted performance derived up to LED manufacturer's data and engineering design estimates, based on IESNA LM-80 methodology. Actual experience may vary due to field application conditions. L70 is the predicted time when LED performance depreciates to 70% of initial lumen output. Calculated per IESNA TM21-11. Published L70 hours limited to 6 times actual LED test hours.

Ambient Temperature °C	Driver mA	Calculated L70 Hours	L70 per TM-21 (Hours)	Lumen Maintenance % at 60,000 hrs
25 °C	Up to 610 mA	>100,000 hrs	>100,000 hrs	>99%

Field Adjustable Wattage Selector (FAWS) Multplier Chart

FAWS Position	Typical Delivered Lumens Multiplier	Typical System Wattage Multiplier
1	0.286	0.273
2	0.515	0.487
3	0.605	0.574
4	0.725	0.695
5	0.771	0.741
6	0.803	0.812
7	0.834	0.878
8	0.933	0.924
9	0.982	0.980
10	1.000	1.000

Note: Typical value accuracy +/- 5%

MV MainView with LumiLock LED engine GX5

Post Top

Dimensions

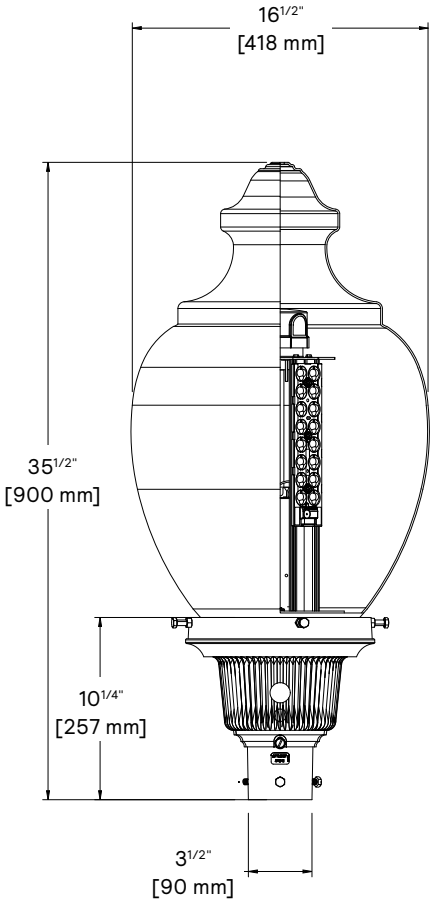

VC Globe

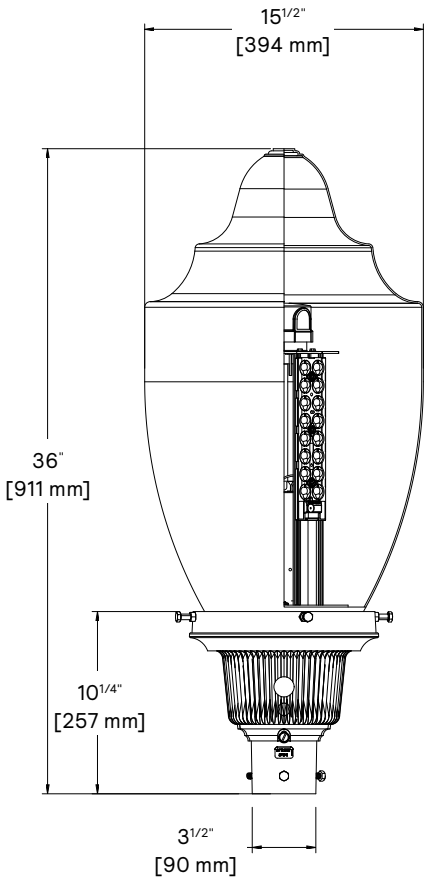

WC Globe

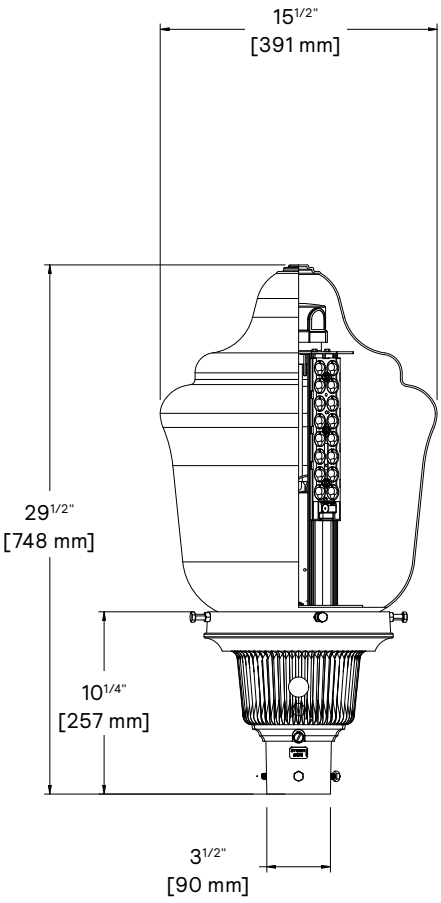

TC Globe

Dimensions will vary when other pods or cage option are specified. See specification text on following pages for pods and cage option dimensions.

EPA: 1.17 sq. ft (Varies depending on options selected)

Weight: 20 lbs / 9.1 kg (G pod) to 26 lbs / 11.8kg maximum (B pod)

Housing Options

Fitter/Pod Options



A Octagonal



B Round with Scalloped Petals



C Fluted Tapered Hourglass



D Smooth Tapered Hourglass



G Tall Round Fluted

Cage Option (VC Globe Only)



B Cage (Wide)

Finial Options

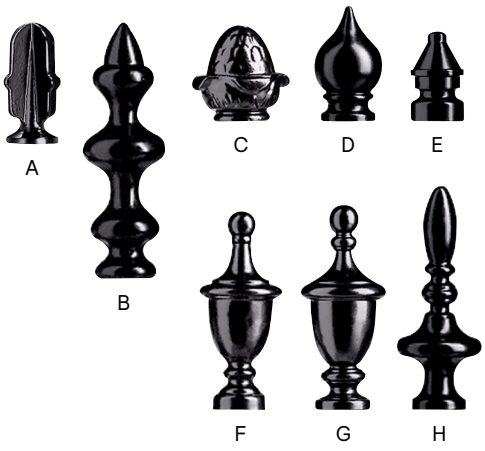

MV MainView with LumiLock LED engine GX5

Post Top

Specifications

Housing

Optional Pods

Note: The following applies to **all** Pods.

- Accepts standard Hadco twistlock LumiLock LED light engines. Order appropriate RPTLD for retrofits / upgrades from HID to LED or to next generation LED – quickly and easily updated in the field.
- Globe holder has an internal water trap to prevent water from entering driver compartment.
- Rugged cast aluminum post fitter utilizes four (4) 5/16- 18 black cadmium stainless steel fasteners (Hex head) for mounting to 3" O.D. post tenon with 3" deep insertion per ANSI C136.3.
- All hardware to be stainless steel and captive.
- Optional internal button eye photocell.

A: Octagonal style fitter is constructed of die-cast 360 aluminum alloy, low copper for high resistance to corrosion. Optional internal twist-lock photo eye receptacle. Easy access to electrical components and photo eye receptacle or photo cell through the captive side-hinged door on the pod providing 135° entry – closure hardware captive and operable while wearing protective gloves. Pod height is 10-3/4" & width is 10-1/4".

B: Round fitter with scalloped petals is constructed of die-cast 360 aluminum alloy, low copper for high resistance to corrosion. Optional internal twistlock photo eye receptacle. Easy access to electrical components and photo eye receptacle or photo cell through the captive side-hinged door on the pod providing 180° entry – toolless latch operable with protective gloves per ANSI C136.37. Pod height is 12-1/4" & width is 11-1/2".

C: Fluted tapered hourglass fitter is constructed of sand-cast 356 HM High-Strength cast aluminum, low copper for high resistance to corrosion. Pod height is 8" & width is 8-3/4".

D: Smooth tapered hourglass fitter is constructed of sand-cast 356 HM High-Strength cast aluminum, low copper for high resistance to corrosion. Pod height is 8" & width is 9-1/4".

G: Tall Round fluted fitter is constructed of die-cast 360 aluminum alloy, low copper for high resistance to corrosion. Optional internal twist-lock photo eye receptacle. Easy access to electrical components and photo eye receptacle or photo cell through the pod – door is tethered to pod to prevent accidental disengagement, closure hardware captive and operable with flat blade screwdriver while wearing protective gloves per ANSI C136.37. Pod height is 9" and width is 9".

Integrated Features

Terminal Block

Standard wiring terminal block accepts three (3) 6-14 AWG solid or stranded wires exceeding ANSI C136.32, located inside the pod – standard for all.

Note: Please note that this integrated feature always comes standard with all luminaires.

Label indicating line, neutral and ground available as a custom, contact factory.

Wiring for connection to supply AC can be provided from the terminal block to run through the arm (when ordered separately) and / or down through the pole (ordered separately), available as a custom – contact factory, please specify number of wires, insulation color(s), length(s), solid or stranded and AWG.

Brackets and Poles

Visit the website for pole and post top bracket options.

Globes

U.V. resistant, impact modified visual comfort ("frosted") acrylic textured full acorn globes, held by utilizing four (4) 5/16-18 black cadmium stainless steel fasteners (Hex head or Allen head as specified – same as post fitter fasteners).

Multiple distinct styles to choose from, see **Ordering guide (page 1)** for details.

Metal ring (standard and always included) protects acrylic globe neck from direct contact with fasteners.

Cage

B: Cage (Wide, 16-1/2" dia.) is constructed of die-cast 360 aluminum alloy, low copper for high resistance to corrosion. Cage has 4 legs each with square decorative flower block. Solid rectangular band around top of cage. Height of cage is 15" and width of cage is 20". Finish is polyester thermoset powdercoat.

Note: Cannot be used with "**A**" Pod.

Finials

All finials are cast aluminum mounted with 1/4-20 stainless steel threaded studs. Standard finial finish will match fixture finish as specified. Finish is thermoset powdercoat.

Fasteners

Used to secure post fitter to post tenon and globe to globe holder.

1: Hex Head Bolts: Black cadmium stainless steel.
2: Allen Head Bolts: Black cadmium stainless steel.

Light Engine

Composed of 4 main components: LED Module / Optical System / Heat Sink / Driver. Electrical components are RoHS compliant, IP66 sealed light engine. LEDs tested by ISO 17025-2005 accredited lab in accordance with IESNA LM-80 guidelines, extrapolations in accordance with IESNA TM-21. Metal core board ensures greater heat transfer and longer lifespan.

Entire light engine is an all inclusive assembly that is quickly and easily removable (including quick disconnect) while wearing protective gloves per ANSI C136.37 for retrofitting / upgrading in the field – see instructions for details.

LED Module

Composed of high-performance white LEDs. Color temperature as per ANSI/NEMA bin 3000K nominal (3045K +/- 175K) or 4000K nominal (3985K +/- 275K) CRI 70 min, or 2700K nominal (2725 ±145K) CRI 80 min.

Optical System

Composed of high performance UV stabilized optical grade polymer refractor lenses to achieve desired distribution optimized to get maximum spacing, target lumens and a superior lighting uniformity. System is rated IP66. Performance shall be tested per LM-63, LM-79 and TM-15 (IESNA) certifying its photometric performance.

Short Optics: Superior performance and light level uniformity for applications where typical pole spacing is approximately five times mounting height of luminaire. Provides higher illumination levels under pole area, ideal for increased security and applications requiring superior facial recognition. Type 3 and Type 5 distribution choices available.

Note: Distribution can easily be changed in the field, and outer light engines can be easily adjusted (either individually or both) in the field to optimize lighting performance and/or address light trespass – see instructions for details.

All wiring is full copper, with 105C rated insulation. LED modules are secured to heatsinks using #8 stainless steel hardware, guaranteeing construction rigidity and vibration resistance.

MV MainView with LumiLock LED engine GX5

Post Top

Specifications (continued)

Heat Sink

Consists of four extruded aluminum heat sinks optimizing the LEDs efficiency and life, clear anodized to Architectural Class II specifications for excellent corrosion resistance and surface finish. Extruded heatsinks meet or exceed tolerances as specified by AEC (Aluminum Extruders Council) standards and have been designed to provide superior surface flatness, ensuring excellent contact between heatsinks and LEDs. Heat sinks optimized for maximum natural convection heat transfer, does not use any cooling device with moving parts (passive cooling only).

Heat sinks are secured using galvanized steel brackets and stainless steel hardware to provide additional corrosion resistance.

Driver

Driver comes standard with 0-10V dimming capability. High power factor of 95%. Electronic driver, operating range 50/60 Hz. Auto adjusting universal voltage input from 120 to 277 VAC or 347 to 480 VAC or 277 to 480VAC rated for both application line to line or line to neutral, Class I, THD of 20% max. Driver operating ambient temperature range is -40F (-40C) to +130F (+55C). Certified in compliance to UL1310 or UL8750 cULus requirement (dry and damp location). The current supplying the LEDs will be reduced by the driver if the driver experiences internal overheating as a protection to the LEDs and the electrical components. Output is protected from short circuits, voltage overload and current overload. Automatic recovery after correction.

Standard built in driver surge protection of 2.5kV or 6kV (min). Due to the inrush current that occurs with electronic drivers, recommend using a time-delay or slow blow fuse to avoid unwanted fuse blowing (false tripping) that can occur with normal or fast acting fuses.

Driver enables setting LED drive current to meet your specific total wattage consumption, lumen output and/or efficacy needs - available as a custom, contact factory.

Integral Control Options

D4ID*: D4i certified DALI driver. Replaces DADJ Dynadimmer or DL DALI driver with same functionality plus next generation extended DALI 2 functionality - contact factory for details.

* This driver option ships with DALI bus power turned on and luminaire information loaded in Memory bank 1 as per ANSI C137.4 (2021). Consult factory for any other driver programming requirement.

S: Field Adjustable Wattage Selector **(FAWS)**, pre set to the highest position, can be easily switched in the field to the required position. This reduces total luminaire wattage consumption and reduces the light level – see the FAWS multiplier chart for more details.

Note: It is not recommended to use **FAWS** with other dimming or controls; if you do, set the switch to position 10 (maximum output) to enable the other dimming or controls. Switching FAWS to any position other than 10 will disable the other dimming or controls.

Connected Lighting

Interact City connector node provides the plug and play wireless communications technology to connect your street light to the Interact City lighting management system. With Interact you can remotely manage, monitor and control all city lighting, from roads and streets, to parks and plazas, and bridges from one single system. Connected lighting enables capabilities including, accurate on/ off switching, dimming control, fault reporting and integration with other systems to enable condition based lighting. Interact provides you with a robust and scalable infrastructure to further reduce energy consumption, improve operations, and turn lighting into a connected network for your smart city journey. For more details visit: https://www.interact-lighting.com/en-us/application-areas/city.

Surge Protection Options

SP1: Fail-on surge protection device designed for high-exposure outdoor environments. Provides a nominal luminaire surge immunity level of 10 kV / 5 kA in accordance with ANSI C136.2 Enhanced Level requirements and is designed for surge environments consistent with IEEE C62.41.2 Location Category C. The SPD provides a maximum discharge current (Imax) of 10 kA (8/20 µs), corresponding to 10 kV / 10 kA combination wave exposure conditions, and meets U.S. Department of Energy MSSLC Model Specification requirements.

SP2: Fail-On 20kV/10kA surge protection device that provides extra protection beyond the SP1 10kV/10kA level.

SP1X: Fail-off surge protection device designed for high-exposure outdoor environments. Provides a nominal luminaire surge immunity level of 10 kV / 5 kA in accordance with ANSI C136.2 Enhanced Level requirements and is designed for surge environments consistent with IEEE C62.41.2 Location Category C. The SPD provides a maximum discharge current (Imax) of 10 kA (8/20 µs), corresponding to 10 kV / 10 kA combination wave exposure conditions, and meets U.S. Department of Energy MSSLC Model Specification requirements.

SP2X: Fail-Off 20kV/10kA surge protection device that provides extra protection beyond the SP1X 10kV/10kA level.

Luminaire Useful Life

Refer to IES files for energy consumption and delivered lumens for each option. Based on ISTMT in situ thermal testing in accordance with UL1598 and UL8750, using LM-80 data from LED manufacturers and engineering prediction methods, the luminaire useful life is expected to reach 100,000+ hours with >L70 lumen maintenance @ 25°C. Luminaire Useful Life accounts for LED lumen maintenance AND all of these additional factors including: LED color shift, LED life, driver life, PCB substrate, solder joints, on/off cycles, burning hours and corrosion. Lifetime statements do not include the use of controls, including networked controllers.

Finish

Color in accordance with the AAMA 2603 standard. Application of polyester powder coat paint (4 mils/100 microns) with ± 1 mils / 24 microns of tolerance. The Thermosetting resins provides a discoloration resistant finish in accordance with the ASTM D2244 standard, as well as luster retention in keeping with the ASTM D523 standard and humidity proof in accordance with the ASTM D2247 standard. The surface treatment achieves a minimum of 2000 hours for salt spray resistant finish in accordance with testing performed and per ASTM B117 standard. Other finish colors, RAL colors, marine finishes or coastal finishes available as a custom - contact factory.

LED Products Manufacturing Standard

The electronic components sensitive to electrostatic discharge (ESD) such as light emitting diodes (LEDs) are assembled in compliance with IEC61340-5-1 and ANSI/ESD S20.20 standards so as to eliminate ESD events that could decrease the useful life of the product.

Vibration Resistance

Meets the ANSI C136.31 specifications (does not include Cage), tested by a certified lab over 100,000 cycles in all three axes:

VC or **WC** or **TC** globe = Bridge and Overpass per 2023 with C, D pods; Bridge and Overpass per 2010 with G pod.

VC Victorian or **WC** Windsor globe = Bridge and Overpass per 2023 also with A, B pods.

TC Tudor globe = Normal per 2023 with A, B pods.

MV MainView with LumiLock LED engine GX5

Post Top

Specifications (continued)

Service Tag

Each individual luminaire is uniquely identifiable, thanks to the Service tag application. With a simple scan of a QR code, placed inside the luminaire, you gain instant access to the luminaire configuration, making installation and maintenance operations faster and easier, no matter what stage of the luminaire's lifetime. Just download the app and register your product right away.

For more details visit: https://www.genlyte.com/en-us/solutions/technologies-and-innovation/service-tag

Certifications and Compliance

cETLus Listed for Canada and U.S. to the UL 1598 and UL8750 standards, suitable for Wet Locations. The quality systems of the facility where manufactured have been registered by UL to the ISO 9001 series standards. LM80 & LM79 tested. Configurations are DesignLights Consortium qualified, consult DLC QPL Qualified Products List for more details.Suitable for use in ambients from -40°C (-40°F) to +40°C (+104°F). Luminaire complies with or exceeds the following ANSI C136 standards: .2, .3, .4, .10, .15, .16, .22, .24, .25, .31, .37, .41.

IP Ratings

IP66 rated LED light engine.

IK Ratings

Globes are IK08 impact resistance rated.

NEMA Label

ANSI C136.15 compliant label available as a custom – contact factory including which version / year is required.

Warranty

5-year limited warranty. Options available for extended warranties – contact factory. See https://www.genlyte.com/en-us/support/warranties for details and restrictions.

Future Proof Photo Controls

R7: Receptacle with 7 pins enabling dimming and additional functionality (to be determined), can be used with a twist lock Interact City node or photoelectric cell or a shorting cap. Will ship with a shorting cap installed – remove shorting cap when you are ready to install your node.

Buy American Act of 1933 (BAA)

This product is manufactured in one of our US factories and, as of the date of this document, this product was considered a commercially available off-the-shelf (COTS) item meeting the requirements of the BAA.

This BAA designation hereunder does not address (i) the applicability of, or availability of a waiver under, the Trade Agreements Act, or (ii) the "Buy America" domestic content requirements imposed on states, localities, and other non-federal entities as a condition of receiving funds administered by the Department of Transportation or other federal agencies. Prior to ordering, please visit https://www.genlyte.com/en-us/resources/programs/domestic-preference to view a current list of BAA-compliant products to confirm this product's current compliance.

Build America, Buy America Act (BABA)

BABA establishes the minimum domestic content requirements that federal agencies must apply. This product is manufactured in the US and has a domestic content of 55% or more. This BABA designation does not address the "Buy America" domestic content requirements, which may be stricter, imposed on states, localities, and other non-federal entities as a condition of receiving funds administered by federal agencies. Please visit https://www.genlyte.com/en-us/resources/programs/domestic-preference

Prior to ordering, please contact factory to confirm BABA or BABAF compliant configurations (BABAF for projects funded through FHWA must be funded by October 1, 2026), and please submit completed BABA Compliance Certification Checklist.

Scenarios	Pod Photo Control Options	Future Proof Photo Control Options
Scenario 1: Basic Level of Controls only	Choose E, H or R depending on your requirements	Choose None
Scenario 2: Network Control Solutions are being used immediately on this project	Choose None	Choose R7 (will ship with a shorting cap for you to remove and replace with your node)
Scenario 3: You would like the product to be future proof because one day you will use a networked lighting controls system. You also require the use of a basic photo control system now to turn your lights on and off	Choose E, H or R depending on your requirements	Choose R7 (will ship with a shorting cap for you to remove and replace with your node, then move the shorting cap to the pod receptacle R if applicable). If you used a button eye, disconnect the button eye.



Scenario 1:
R in pod (shown with photocell)



Scenario 2:
R7 on light engine (shown with Interact node)



Scenario 3:
R in pod (shown with shorting cap moved from R7) and R7 on light engine (shown with Interact node)

© 2026 Signify Holding. All rights reserved. The information provided herein is subject to change, without notice. Signify does not give any representation or warranty as to the accuracy or completeness of the information included herein and shall not be liable for any action in reliance thereon. The information presented in this document is not intended as any commercial offer and does not form part of any quotation or contract, unless otherwise agreed by Signify.

GENLYTE SOLUTIONS
a signify business

Signify North America Corp.
400 Crossing Blvd, Suite 600
Bridgewater, NJ 08807
Telephone: 800-555-0050

Signify Canada Ltd.
281 Hillmount Road,
Markham, ON, Canada L6C 2S3
Telephone: 800-668-9008

All trademarks are owned by Signify Holding or their respective owners.